IP67



IR remote controller
SIR-15

SLIK-638

- multi-purpose counter in wall mounted IP 67 housing
- batching function
- 2 pulse counting inputs + 1 programmable function input
- 1 counter reset input
- binary outputs REL / OC
- digital debouncing filter
- 4 counter reset sources (manual, ext, auto, modbus)
- ultra bright red, green and blue display
- free configuration software S-Config

The **SLIK-638** universal, programmable counters encased in a tight, wall-mounted housing (IP 67) with 6-digit, large LED display are equipped with two independent counting inputs that can operate in various configurations (pulse or quadrature). Additional programmable input can change basic function of counting inputs (addition or subtraction of pulses from inputs, change the direction of counting) or hold counting without clearing. The **SLIK-638** counter features an independent reset input. The REL / OC outputs with programmable thresholds can be used to control external equipment. The counter may be configured with no need to open the case, by using the remote controller, the local keyboard or with free S-Config software via the RS-485 communication port.

TECHNICAL DATA

Power supply **Power consumption**	19V ÷ 50V DC; 16V ÷ 35V AC or 85 ÷ 260V AC/DC, all separated for 19V ÷ 50V DC: max. 8,7 W; for 16V ÷ 35V AC max. 13 VA; for 85 ÷ 260V AC/DC max. 29 VA
Display	LED, 6 x 38 mm high, red, green or blue (according to order), ultra bright
Displayed values range	-99999 ÷ 999999 + decimal point
Inputs	pulse, fully isolated: - counting (down-up and up-down or quadrature) - programmable function - counter reset - common (COM)
Input levels	low level: 0 V ÷ 1 V; high level: 10 V ÷ 30 V
Input frequency	electronic sensor: 10 kHz (standard), 5 kHz (quadrature); contact sensor: max. 90 Hz (adjustable filter)
Outputs (option)	1, 2 or 4 x REL I_{max}=1A, U_{max}=30VDC/250VAC (cosø=1) or 2 x OC I_{max}=30mA, U_{max}=30VDC, P_{max}=100mW
Power supply output	24V DC +5%, -10% / max. 100 mA, stabilized
Communication interface	RS-485, 8N1 and 8N2, 1200 bit/s ÷ 115200 bit/s, Modbus RTU (not galvanically isolated)
Data memory	non-volatile memory, EEPROM type
Operating temperature	0°C ÷ +50°C (standard), -20°C ÷ +50°C (option)
Storage temperature	-10°C ÷ +70°C (standard), -20°C ÷ +70°C (depending on option)
Protection class	IP 67
Housing	wall mounting; material: ABS + fibreglass
Dimensions (WxHxD)	230 x 140 x 96,5 mm
Weight	max. 1200 g

LED DISPLAY VERSIONS

Ultra bright display (according to order):
- red,
- green,
- blue.



DIMENSIONS

Case dimensions

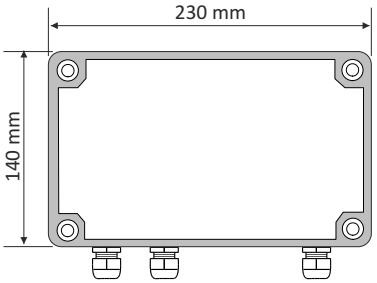

Side view

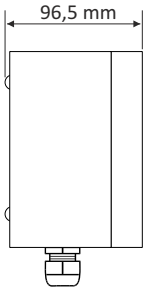

Distances between mounting holes

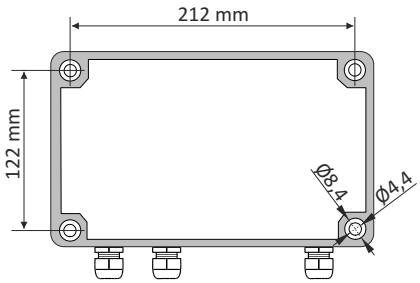

EXAMPLARY PIN ASSIGNMENTS

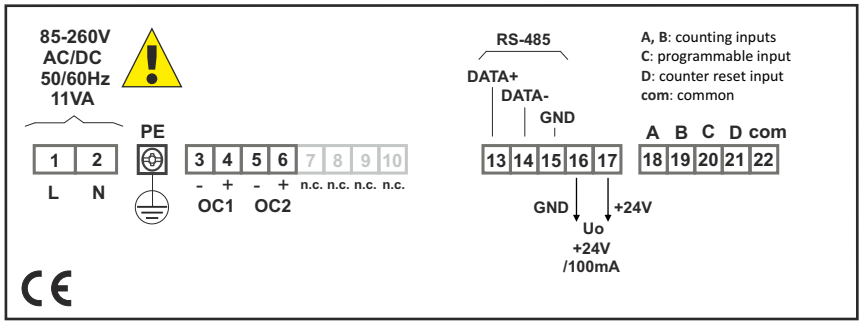

version with 2 x OC

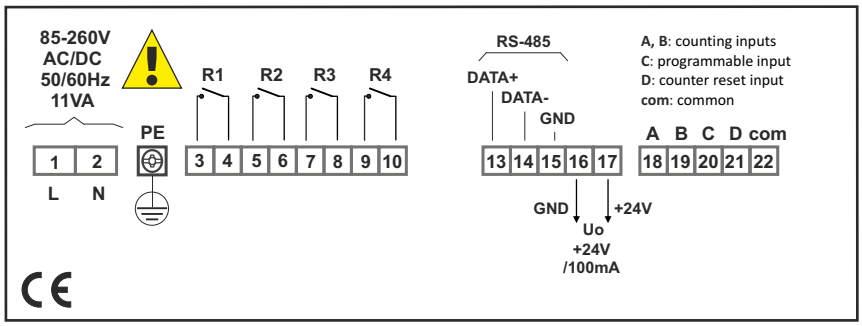

version with 4 x REL

ORDERING

SLIK-638-X-50-XXXX0-10-X-XX1

display:
R : red, ultra bright
G : green, ultra bright
B : blue, ultra bright

type of outputs:
1100 : 2 x REL
1200 : 1 x REL + 1 x OC
2200 : 2 x OC
1111 : 4 x REL
2222 : 4 x OC

options:
00 : no options
08 : operating temp. -20°C ÷ +50°C

power supply:
3 : 24V AC/DC
4 : 85V - 260V AC/DC

REMOTE CONTROLLER



SIR-15
InfraRed remote controllers may be used as external programming keyboard for all SIMEX devices equipped with IR receivers and remote programming functions. Pressing of any local IR controller key, causes transmission of it's code to the device. Functions of particular keys depend on devices features.

Power supply voltage: 6V DC - 4 alkaline batteries type LR44
Operation range: from 0,5 to 5 m (depend on programmed device features)

SOFTWARE



S-Config 2 is used for the simultaneous detection of devices in multiple Modbus RTU networks and allows user to change the configuration of most of them. For each detected device a list of its registers, which the user can modify, is displayed and also additional informations about device parameters (type, address in the network, etc.).
S-Config software can be downloaded from SIMEX website at **www.simex.pl**

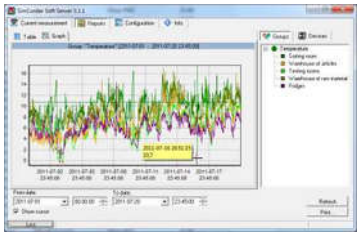

SimCorder Soft is a visualisation application created to facilitate work with advanced networks of the SIMEX devices, for acquisition, visualisation, reporting, archiving, exporting and printing of measurement data from all network devices. You can download measurements from the devices automatically or on demand. There is a possibility of immediate notification about emergency states via SMS or e-mail, which will often allow to quickly resolve an arising problem while avoiding long and expensive stoppages. You can view the measurement data, emergency states and configuration via the internet at every time.

CONVERTERS



The **SRS-U4** module is designed to connect a USB host to slave devices equipped with RS-485 interface. The PC with special software can be used as a host. The **SRS-U4** unit guarantees full galvanic isolation between USB and RS-485 circuits. The converter can work with any devices equipped with RS-485 interface and contains integrated circuit which supports USB 1.1 and USB 2.0 standards. The main purpose is connection of PC host computer with industrial data acquisition and visualisation systems based on RS-485 interface.
The **SRS-U4** can be also manufactured with DIN mounting adaptor.

