SCHAEFFLER



FAG

# 629-C-2Z

Deep groove ball bearing

Schaeffler ID:
0623873160000

Deep groove ball bearing 62..-C-2Z, single row, Generation C, shields, steel sheet metal cage

## Technical information

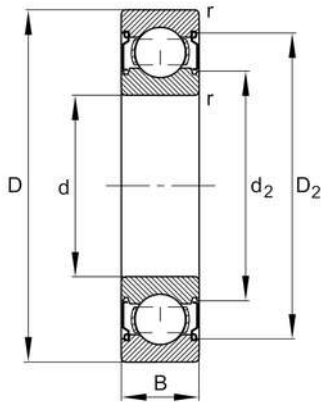


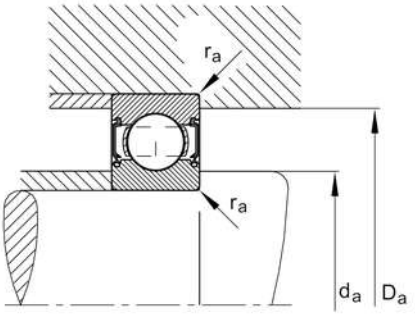


### Main Dimensions & Performance Data

| | | |
|---|---|---|
| d | 9 mm | Bore diameter |
| D | 26 mm | Outside diameter |
| B | 8 mm | Width |
| $C_r$ | 5.300 N | Basic dynamic load rating, radial |
| $C_{0r}$ | 1.970 N | Basic static load rating, radial |
| $C_{ur}$ | 136 N | Fatigue load limit, radial |
| $n_G$ | 38.000 1/min | Limiting speed |
| $n_{\vartheta r}$ | 27.000 1/min | Reference speed |
| | 0,019 kg | Weight |

### Mounting dimensions

| | | |
|---|---|---|
| $d_{a\ min}$ | 11,4 mm | Minimum diameter shaft shoulder |
| $D_{a\ max}$ | 23,6 mm | Maximum diameter of housing shoulder |
| $r_{a\ max}$ | 0,3 mm | Maximum fillet radius |

### Dimensions

| | | |
|---|---|---|
| $r_{min}$ | 0,3 mm | Minimum chamfer dimension |
| $D_2$ | 23,1 mm | Caliber diameter outer ring |
| $d_2$ | 13,6 mm | Caliber diameter inner ring |

### Temperature range

| | | |
|---|---|---|
| $T_{min}$ | -20 °C | Operating temperature min. |
| $T_{max}$ | 120 °C | Operating temperature max. |

### Calculation factors

| | | |
|---|---|---|
| $f_0$ | 12,4 | Calculation factor |

The datasheet is only an overview of dimensions and basic load ratings of the selected product. Please always observe all further information and guidelines for this product. For further information you can use the contact form on our website.