THE INFORMATION CONTAINED IN THIS DRAWING IS THE SOLE PROPERTY OF L-COM, INC. ANY REPRODUCTION IN PART OR WHOLE WITHOUT THE WRITTEN PERMISSION OF L-COM, INC. IS PROHIBITED.

**RoHS Compliant** ✔

| REVISIONS | | | |
|---|---|---|---|
| REV | DESCRIPTION | DATE | APPROVED |
| A | INITIAL RELEASE | 9/24/10 | D.GRIFFIN |
| B | ECN 5210: ADDED WIRE MAP,HARDWARE NOTES & HOOD DIMS., DETAIL VIEW | 12/15/10 | D. CASTRO |
| | | | |
| | | | |

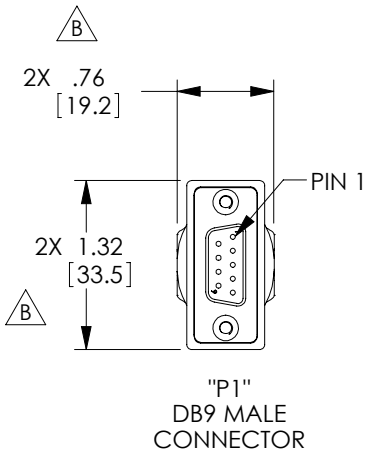


"P1"
DB9 MALE
CONNECTOR

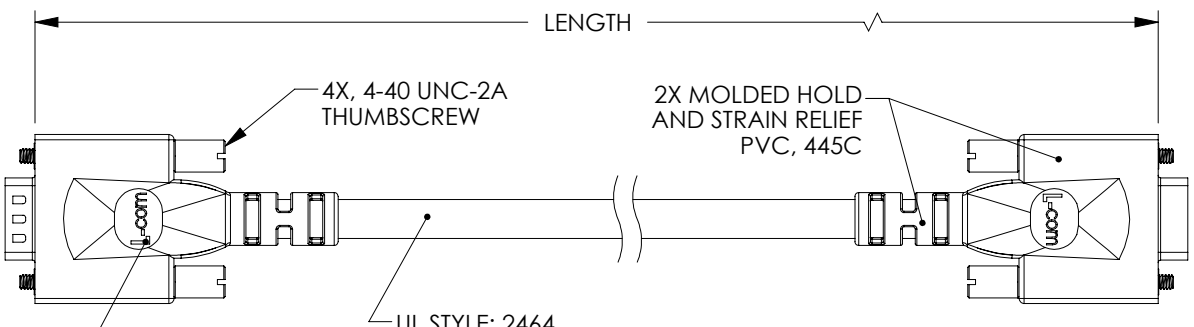


UL STYLE: 2464
9 COND., 20 AWG STRANDED TINNED COPPER
WITH ALUM/POLY SHIELD AND DRAIN WIRE PLUS
TINNED COPPER BRAID SHIELD.
JACKET: PVC, PANTONE 445C
JACKET MARKING: "L-COM OPTIMAL DATA TRANSFER CABLE"

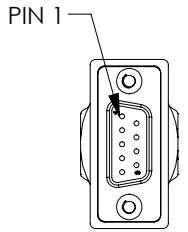


"J1"
DB9 FEMALE
CONNECTOR

B

| WIRE MAP | | |
|---|---|---|
| "P1" | COLOR | "J1" |
| 1 | BLACK | 1 |
| 2 | BROWN | 2 |
| 3 | RED | 3 |
| 4 | ORANGE | 4 |
| 5 | YELLOW | 5 |
| 6 | GREEN | 6 |
| 7 | BLUE | 7 |
| 8 | PURPLE | 8 |
| 9 | GRAY | 9 |
| SHELL | DRAIN | SHELL |

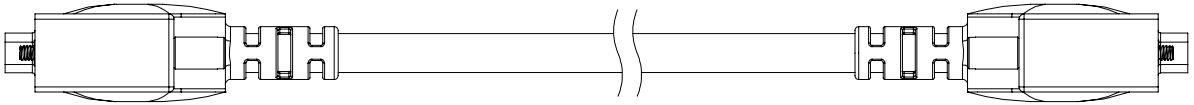

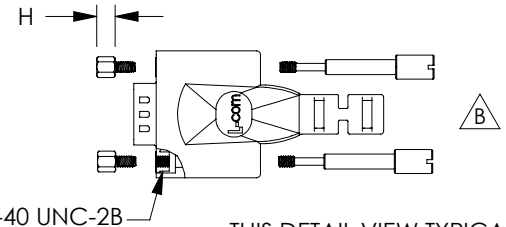


THIS DETAIL VIEW TYPICAL
MALE/FEMALE

| MODEL NUMBER | LENGTH | |
|---|---|---|
| | FEET | METERS |
| CPMS9MF-1 | 1.0 | .30 |
| CPMS9MF-2.5 | 2.5 | .76 |
| CPMS9MF-5 | 5.0 | 1.52 |
| CPMS9MF-10 | 10.0 | 3.05 |
| CPMS9MF-25 | 25.0 | 7.62 |
| CPMS9MF-50 | 50.0 | 15.24 |

NOTES:

B

SUPPLIED WITH THUMBSCREWS IN PLACE.
NOTE: SUPPLIED WITH OPTIONAL USE HARDWARE AND INSTRUCTIONS.
CABLE INTERCONNECTION HARDWARE: (4) SCREWLOCKS, H= .191"
PANEL MOUNT HARDWARE: (4) SCREWLOCKS, H= .160"

CABLE ASSEMBLY SHALL BE TESTED FOR CONTINUITY.

CABLE ASSEMBLY SHALL BE INDIVIDUALLY PACKAGED IN ACCORDANCE WITH L-COM SPECIFICATION PS-0031.

UNLESS OTHERWISE SPECIFIED,
DIMENSIONS ARE IN INCHES [mm]
OVERALL CABLE LENGTH TOLERANCE:
≤12 [305] = +1 [25] / -0
>12 [305] ≤60 [1524] = +2 [51] / -0
>60 [1524] ≤120 [3048] = +4 [102] / -0
>120 [3048] ≤300 [7620] = +6 [152] / -0
>300 [7620] = +5% / -0%
ALL OTHER DIMENSIONAL TOLERANCES:
.X = ± .2
.XX = ± .02
.XXX = ±.005
PROJECTION

| APPROVALS | DATE |
|---|---|
| DRAWN BY D.FRISIELLO | 9/7/10 |
| CHECKED BY S.SMITH | 9/7/10 |
| APPROVED BY S.SMITH | 9/7/10 |

CONFIGURATION DETAILS OF UNDIMENSIONED FEATURES MAY VARY

COLOR VARIATIONS MAY OCCUR

L-COM Global Connectivity
45 BEECHWOOD DRIVE
NORTH ANDOVER, MA
01845

CATEGORY
DATA CABLING

PRODUCT DESCRIPTION
20AWG DATA CABLE ASSEMBLY

| SIZE | FSCM NO. | DWG. NO. | REV. |
|---|---|---|---|
| A | 43321 | CPMS9MF | B |

SCALE: NONE | CAD FILE: CPMS9MF.SLDDRW | SHEET 1 OF 1