PN7512

Pressure sensor with display

PN-160-SEG14-QFRKG/US/ /V

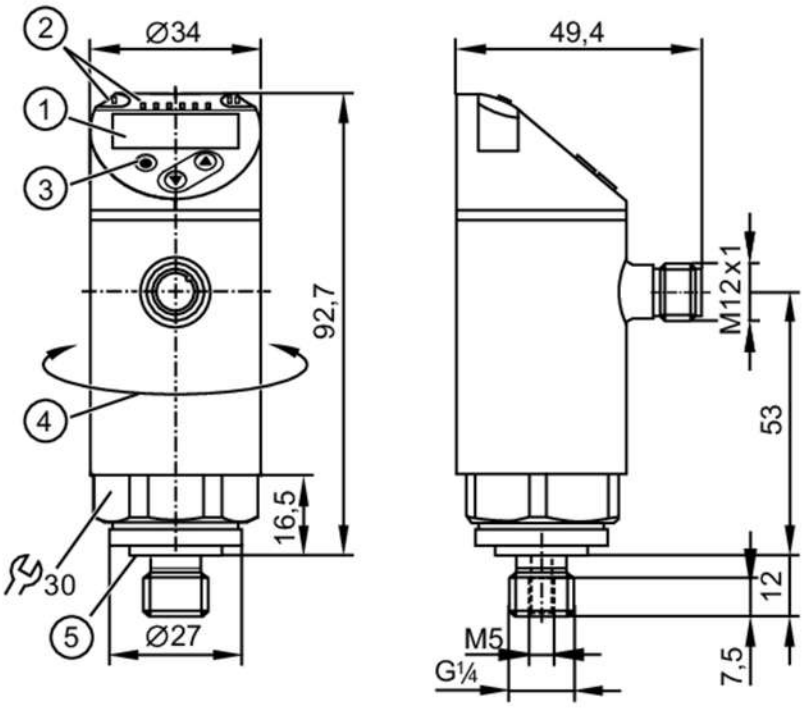

1 alphanumeric display 4-digit red/green
2 LEDs Display unit / switching status
3 programming button
4 upper part of the housing can be rotated 345°
5 Sealing

Product characteristics			
Number of inputs and outputs	Number of digital outputs: 2		
Measuring range	0...160 bar	0...2322 psi	0...16 MPa
Process connection	threaded connection G 1/4 external thread internal thread:M5		
Application			
Special feature	Gold-plated contacts		
Measuring element	ceramic-capacitive pressure measuring cell		
Application	for industrial applications		
Media	liquids and gases		
Conditionally suitable for	use in gases at pressures > 25 bar only on request		
Medium temperature [°C]	-25...80		
Min. bursting pressure	750 bar	10900 psi	75 MPa
Pressure rating	350 bar	5100 psi	35 MPa
Vacuum resistance	-1000 mbar	-0.1 MPa	
Type of pressure	relative pressure		
Electrical data			
Operating voltage [V]	18...30 DC; (to SELV/PELV)		
Current consumption [mA]	< 35		
Min. insulation resistance [MΩ]	100; (500 V DC)		
Protection class	III		

PN7512

Pressure sensor with display

PN-160-SEG14-QFRKG/US/ /V

Reverse polarity protection		yes		
Power-on delay time	[s]	< 0.3		
Integrated watchdog		yes		
Inputs / outputs				
Number of inputs and outputs		Number of digital outputs: 2		
Outputs				
Total number of outputs		2		
Output signal		switching signal; IO-Link; (configurable)		
Electrical design		PNP/NPN		
Number of digital outputs		2		
Output function		normally open / normally closed; (parameterisable)		
Max. voltage drop switching output DC	[V]	2.5		
Permanent current rating of switching output DC	[mA]	150; (200 (...60 °C) 250 (...40 °C))		
Switching frequency DC	[Hz]	< 170		
Short-circuit protection		yes		
Type of short-circuit protection		pulsed		
Overload protection		yes		
Measuring/setting range				
Measuring range		0...160 bar	0...2322 psi	0...16 MPa
Set point SP		1.3...160 bar	19...2321 psi	0.13...16 MPa
Reset point rP		0.5...159.2 bar	7...2309 psi	0.05...15.92 MPa
Min. difference between SP and rP		0.8 bar	12 psi	0.08 MPa
In steps of		0.1 bar	1 psi	0.01 MPa
Accuracy / deviations				
Switch point accuracy	[% of the span]	< ± 0,5		
Repeatability	[% of the span]	< ± 0,1; (with temperature fluctuations < 10 K)		
Characteristics deviation	[% of the span]	< ± 0,25 (BFSL) / < ± 0,5 (LS); (BFSL = Best Fit Straight Line; LS = limit value setting)		
Hysteresis deviation	[% of the span]	< ± 0,25		
Long-term stability	[% of the span]	< ± 0,05; (per 6 months)		
Temperature coefficient zero point	[% of the span / 10 K]	< ± 0,2; (-0...80 °C)		
Temperature coefficient span	[% of the span / 10 K]	< ± 0,2; (-0...80 °C)		
Response times				
Response time	[ms]	< 3		
Delay time programmable dS, dr	[s]	0...50		
Damping process value dAP	[s]	0...4		

PN7512

Pressure sensor with display

PN-160-SEG14-QFRKG/US/ /V

Software / programming			
Parameter setting options		hysteresis / window; normally open / normally closed; switching logic; switch-on/switch-off delay; Damping; Display unit	
Interfaces			
Communication interface		IO-Link	
Transmission type		COM2 (38,4 kBaud)	
IO-Link revision		1.1	
SDCI standard		IEC 61131-9	
Profiles		Smart Sensor ED2: Digital Measuring Sensor (0x000A), Identification and Diagnosis (0x4000)	
SIO mode		yes	
Required master port type		A; (when pin 2 not connected: B)	
Min. process cycle time	[ms]	3	
IO-Link resolution pressure	[bar]	0.05	
IO-Link process data (cyclical)		**function**	**bit length**
		pressure	16
		device status	4
		binary switching information	2
IO-Link functions (acyclical)		application specific tag	
Supported DeviceIDs		**Type of operation**	**DeviceID**
		default	1196
Note		For further information please see the IODD PDF file under "Downloads"	
Operating conditions			
Ambient temperature	[°C]	-25...80	
Storage temperature	[°C]	-40...100	
Protection		IP 65; IP 67	
Tests / approvals			
EMC		DIN EN 61000-6-2	
		DIN EN 61000-6-3	
Shock resistance		DIN EN 60068-2-27	50 g (11 ms)
Vibration resistance		DIN EN 60068-2-6	20 g (10...2000 Hz)
MTTF	[years]	249	
UL approval		UL Approval no.	J039
		File number UL	E174189
Pressure Equipment Directive		Sound engineering practice; can be used for group 2 fluids; group 1 fluids on request	
Mechanical data			
Weight	[g]	305	
Materials		stainless steel (316L/1.4404); PBT+PC-GF30; PBT-GF20; PC	
Materials (wetted parts)		stainless steel (316L/1.4404); Al2O3 (ceramics); FKM	
Min. pressure cycles		100 million	
Tightening torque	[Nm]	25...35; (recommended tightening torque; depends on lubrication, seal and pressure rating)	
Process connection		threaded connection G 1/4 external thread internal thread:M5	
Restrictor element integrated		no (can be retrofitted)	

PN7512

Pressure sensor with display

PN-160-SEG14-QFRKG/US/ /V

Displays / operating elements		
Display	Display unit	3 x LED, green (bar, psi, MPa)
	switching status	2 x LED, yellow
	measured values	alphanumeric display, red/green 4-digit

Remarks	
Pack quantity	1 pcs.

Electrical connection

Connector: 1 x M12; coding: A; Contacts: gold-plated



Connection

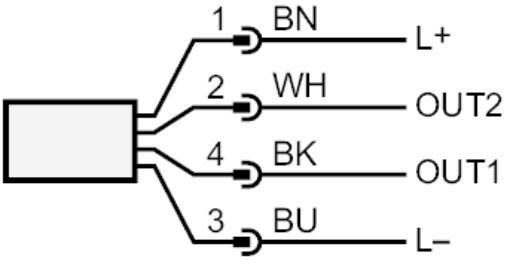

OUT1	switching output IO-Link
OUT2	switching output
	colours to DIN EN 60947-5-2
	Core colours :
BK =	black
BN =	brown
BU =	blue
WH =	white