IG6215

Inductive sensor with IO-Link

IGK4012-FRKG/IO/US-104

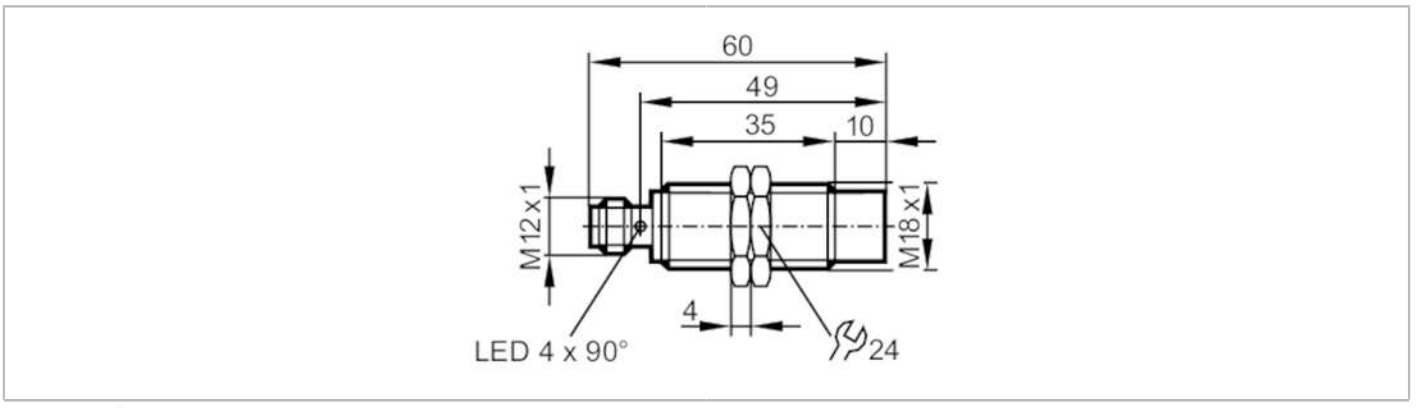

Product characteristics		
Electrical design		PNP/NPN; (parameterisable)
Output function		normally open / normally closed; (parameterisable)
Communication interface		IO-Link
Housing		threaded type
Dimensions	[mm]	M18 x 1 / L = 60
Electrical data		
Operating voltage	[V]	10...30 DC
Current consumption	[mA]	< 15
Protection class		III
Reverse polarity protection		yes
Outputs		
Electrical design		PNP/NPN; (parameterisable)
Output function		normally open / normally closed; (parameterisable)
Max. voltage drop switching output DC	[V]	2.5
Permanent current rating of switching output DC	[mA]	100
Switching frequency DC	[Hz]	300
Notes on switching frequency	[Hz]	IO-Link mode: 100
Short-circuit protection		yes
Overload protection		yes
Detection zone		
Switch point IO-Link	[mm]	2.4...12.1; (parameterisable)
Measuring range IO-Link	[mm]	1.3...13
Accuracy / deviations		
Correction factor		steel: 1 / stainless steel: 0.7 / brass: 0.5 / aluminium: 0.5 / copper: 0.4
Hysteresis	[% of Sr]	3...15
Note on hysteresis		parameterisable
Linearity error IO-Link	[%]	± 2; (of the final value of the measuring range)
Repeatability analogue output	[%]	± 1; (of the final value of the measuring range)
Temperature coefficient		± 0,3

IG6215

Inductive sensor with IO-Link

IGK4012-FRKG/IO/US-104

[%/K vom MEW]			
Temperature drift		± 10 %; (of the final value of the measuring range)	
Interfaces			
Communication interface		IO-Link	
Transmission type		COM2 (38,4 kBaud)	
IO-Link revision		1.1	
SDCI standard		IEC 61131-9	
Profiles		Smart Sensor: Identification and diagnosis; Multi-channel, two setpoint switching sensor, type 0 Generic Profiled Sensor; Teach Channel	
SIO mode		yes	
Required master port type		A	
Min. process cycle time	[ms]	3.2	
IO-Link process data (cyclical)	function	bit length	
	process value	16	
	device status	4	
	binary switching information	2	
IO-Link functions (acyclical)		switching cycles counter; switch-on cycle counter; operating hours counter; internal temperature; application specific tag	
Supported DeviceIDs	Type of operation	DeviceID	
	Default	1344	
Note		For further information please see the IODD PDF file under "Downloads"	
Operating conditions			
Ambient temperature	[°C]	-40...85	
Protection		IP 65; IP 66; IP 67; IP 68; IP 69K	
Tests / approvals			
EMC	EN 61000-4-2 ESD	4 kV CD / 8 kV AD	
	EN 61000-4-3 HF radiated	10 V/m	
	EN 61000-4-4 Burst	2 kV	
	EN 61000-4-6 HF conducted	10 V	
	EN 55011	class B	
Vibration resistance	EN 60068-2-6 Fc	20 g (10...3000 Hz) / 50 sweep cycles, 1 octave per minute, in 3 axes	
Shock resistance	EN 60068-2-27 Ea	100 g 11 ms half-sine; 3 shocks each in every direction of the 3 coordinate axes	
Continuous shock resistance	EN 60068-2-27 Ea	40 g 6 ms; 4000 shocks each in every direction of the 3 coordinate axes	
Fast temperature change	EN 60068-2-14 Na	TA = -40 °C; TB = 85 °C; t1 = 30 min; t2 = < 10 s; 50 cycles	
MTTF	[years]	599	
Embedded software included		yes	
UL approval	Ta	-25...70 °C	
	Enclosure type	Type 1	
	power supply	Limited Voltage/Current	
	UL Approval no.	A034	
	File number UL	E174191	
Mechanical data			
Weight	[g]	46.5	
Housing		threaded type	

IG6215

Inductive sensor with IO-Link

IGK4012-FRKG/IO/US-104

Mounting		non-flush mountable
Dimensions	[mm]	M18 x 1 / L = 60
Thread designation		M18 x 1
Materials		brass white bronze coated; sensing face: PBT orange; LED window: PEI; lock nuts: brass white bronze coated

Displays / operating elements

Display	switching status	4 x LED, yellow lights

Accessories

Items supplied	lock nuts: 2

Remarks

Pack quantity	1 pcs.

Electrical connection - plug

Connector: 1 x M12; coding: A



Connection

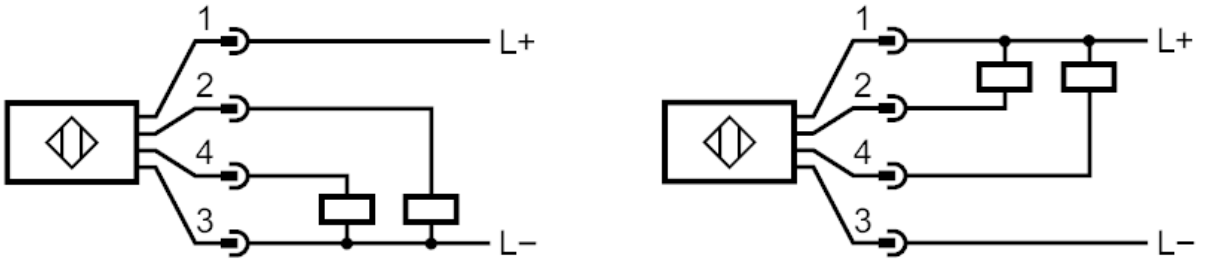

2: OUT 2
4: OUT / IO-Link 1