Fig. 3

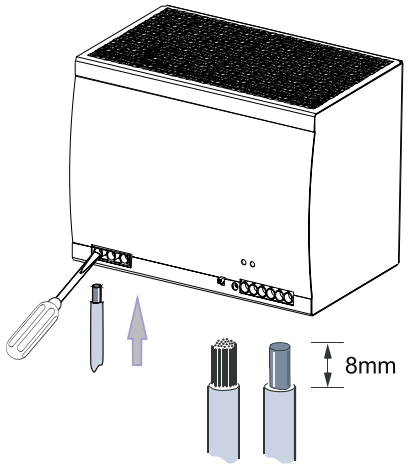

Connector size range:
Fine strand with ferrule 0.2 ... 4.0 mm² / 24 ... 11 AWG
Rigid 0.2 ... 6.0 mm² / 24 ... 10 AWG

Tightening torque of input connector:
Max. 1 Nm / 9 lb.in
Tightening torque of output connector:
Max. 0.62 Nm / 5.5 lb.in

Use copper conductors 60/75 °C only

Fig. 4

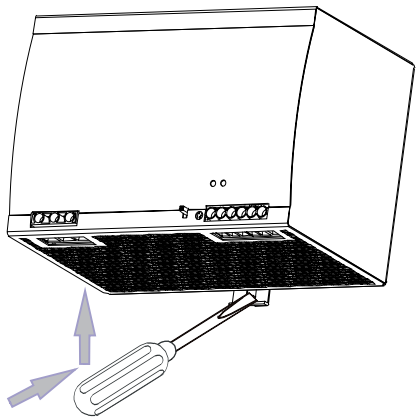

Fig. 5 Derating

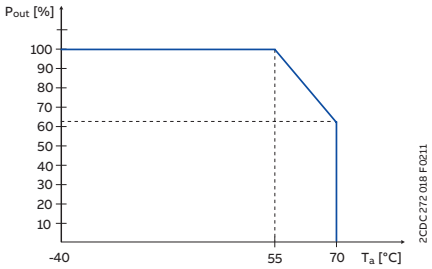

ABB AG – STOTZ-KONTAKT
Eppelheimer Str. 82
DE-69123 Heidelberg
go.abb/contact

new.abb.com/low-voltage

Further information:

Revision
A

Revision date
2025-07-22

Document number
1SVC427034M0001

© Copyright 2025 ABB.
All rights reserved.
Specifications subject
to change without notice.

SAFETY INSTRUCTIONS

CP-E 24/20.0; CP-E 48/10.0

Primary switch mode power supplies CP-E range

Doc.no. 1SVC 427 034 M0001 A (07/25)

ar	تحذير: جهد كهربائي خطر! راجع تعليمات التشغيل. افصل الكهرباء وقم بتأمينها قبل العمل في هذا الجهاز تنبيه! يجب عدم التركيب إلا من خلال شخص على دراية بمجال التقنية الكهربائية .	it	Attenzione: Tensione pericolosa! Fare riferimento alle istruzioni per l'uso. Prima di intervenire su questo dispositivo, scollegare e isolare tutte le fonti di alimentazione. Attenzione! L'installazione deve essere eseguita esclusivamente da un installatore qualificato.
bg	Предупреждение: Опасно напрежение! Вижте инструкциите за работа. Изключете и блокирайте захранването преди. да работите с устройството. Внимание! Да се монтира само от експерт електротехник.	lt	Įspėjimas: Pavojinga įtampa! Žr. naudojimo instrukcijas. Atjunkite ir laikinai užblokuokite maitinimą prieš dirbdami su šiuo įrenginiu. Dėmesio! Įrengti gali tik asmuo, turintis elektrotechniko patirties.
cs	Varování: Nebezpečné napětí! Viz návod k obsluze. Před zahájením prací na tomto zařízení odpojte a uzamkněte napájení. Pozor! Toto zařízení smí instalovat pouze osoba s elektrotechnickou odbornností.	lv	Brīdinājums: Bīstams spriegums! Skatiet darba norādījumus. Pirms sākat darbu ar šo ierīci, atvienojiet un bloķējiet strāvas padevi. Uzmanību! Uzstādīšanu drīkst veikt tikai persona ar zināšanām par elektrotehniku.
da	Advarsel: Farlig elektrisk spænding! Se betjeningsvejledningen. Frakobl enheden, og afbryd strømforsyningen, før du arbejder med denne enhed. Giv agt! Installation må kun foretages af personer med elektroteknisk ekspertise.	nl	Waarschuwing: Gevaarlijke spanning! Raadpleeg de bedieningsinstructies. Koppel dit apparaat los van de stroomvoorziening voordat u werkzaamheden uitvoert. Let op! Installatie mag alleen worden uitgevoerd door een monteur met elektrotechnische expertise.
de	Warnung: Gefährliche Spannung! Siehe Bedienungsanleitung. Vor dem Arbeiten Gerät ausschalten und von der Spannungsversorgung trennen. Achtung! Installation nur durch elektrotechnische Fachkraft.	no	Advarsel: Farlig spenning! Se i bruksanvisningen. Koble fra og steng av strømmen før du arbeider på denne enheten. Forsiktig! Montering skal kun utføres av kvalifiserte personer med elektrokompetanse.
el	Προειδοποίηση: Επικίνδυνη τάση! Ανατρέξτε στις οδηγίες λειτουργίας. Αποσυνδέστε και απομονώστε την παροχή ισχύος προτού ξε κινήσετε τις εργασίες σε αυτήν τη συσκευή. Προσοχή! Η εγκατάσταση πρέπει να γίνεται μόνο από αδειούχο ηλεκτρολόγο εγκαταστάτη.	pl	Uwaga: Niebezpieczne napięcie! Sprawdź instrukcję obsługi. Przed rozpoczęciem wykonywania pracy z tym urządzeniem należy odłączyć je od zasilania i zabezpieczyć przed przypadkowym załączeniem. Uwaga! Montaż może wykonywać wyłącznie osoba posiadająca odpowiednie kwalifikacje i uprawnienia.
en	Warning: Hazardous voltage! Refer to operating instructions. Disconnect and lock out power before working on this device. Attention! Installation should only be performed by electrically trained personnel.	pt	Aviso: Tensão perigosa! Consulte as instruções de operação. Desconecte e desligue a energia elétrica antes de trabalhar nesse dispositivo. Atenção! A instalação deve ser feita apenas por uma pessoa com especialidade eletrotécnica.
es	Advertencia: ¡Tensión peligrosa! Consulte las instrucciones de funcionamiento. Antes de trabajar con este dispositivo, desconecte y bloquee la corriente. ¡Atención! La instalación debe ser realizada únicamente por un técnico electricista.	ro	Avertisment: Tensiune electrică periculoasă! Consultați instrucțiunile de utilizare. Deconectați și închideți sursa de energie înainte de a lucra cu acest dispozitiv. Atenție! Instalarea trebuie realizată doar de către o persoană cu expertiză electrotehnică.
et	Hoiatus: Elektrilöögi oht! Lisateavet vaadake kasutusjuhendist. Enne selle seadmega töötamist ühendage lahti ja lukustage toide. Tähelepanu! Seadet tohib paigaldada ainult elektrotehnilise kogemusega isik.	ru	Предупреждение: Опасное электрическое напряжение! Обратитесь к инструкциям по эксплуатации. Отключите электропитание и обеспечьте безопасность перед началом работ. Внимание! Монтаж должен выполняться только специалистом по электротехническим работам.
fi	Varoitus: Vaarallinen jännite! Katso käyttöohje. Katkaise virta ja estä virran kytkeminen lukituksella ennen töiden aloittamista. Huomio! Asennuksen saa suorittaa vain henkilö, jolla on kokemusta sähkötekniikasta.	sk	Výstraha: Nebezpečné napätie! Pozrite si návod na použitie. Pred začatím prác na tomto zariadení odpojte a zablokujte napájanie. Pozor! Inštaláciu smie vykonávať len osoba s odbornými znalosťami v oblasti elektrotechniky.
fr	Avertissement: Tension dangereuse! Consultez les consignes d'utilisation. Débranchez et verrouillez l'alimentation électrique avant d'entreprendre des travaux sur cet appareil. Attention! L'installation doit être effectuée uniquement par une personne ayant une expertise en électrotechnique.	sl	Opozorilo: Nevarna napetost! Glejte navodila za uporabo. Pred delom na tej napravi izklopite in zaklenite električno napajanje. Pozor! Namestitev sme izvesti samo elektrotehnični strokovnjak.
hr	Upozorenje: Opasan napon! Pogledajte upute za uporabu. Odspojite i isključite struju prije rada na ovom uređaju. Pažnja! Ugradnja je dopuštena samo osobama stručnim u području elektrotehnike.	sv	Varning: Livsfarlig spänning! Se i bruksanvisningen. Frånkoppla och blockera anläggning eller en anläggningsdel innan arbete utförs. Obs! Får endast installeras av behörig elektriker.
hu	Figyelmeztetés: Veszélyes feszültség! Lásd a használati utasítást. Válassza le és zárja ki az áramellátást, mielőtt a berendezésen dolgozni kezd. Figyelem! Az üzembe helyezést csak elektrotechnikai szakértelemmel rendelkező személy végezheti el.	tr	Uyarı: Tehlikeli gerilim! Çalışma talimatlarına bakın. Bu cihaz üzerinde çalışmadan önce elektriği kesin ve kilitleyin. Dikkat! Yalnızca elektroteknik uzmanlığa sahip kişiler tarafından kurulabilir.
		zh	警告：高压危险! 请参见操作手册。操作本设备前请断开并锁定电源。注意！ 安装仅限专业电气人员。

ADDITIONAL INFORMATION FOR USA/CANADA

FOR USE IN A POLLUTION DEGREE 2 ENVIRONMENT.
THIS EQUIPMENT IS SUITABLE FOR USE IN CLASS I, DIVISION 2, GROUPS A, B, C, and D OR NON-HAZARDOUS LOCATIONS ONLY.
WARNING - EXPLOSION HAZARD - SUBSTITUTION OF COMPONENTS MAY IMPAIR SUITABILITY FOR CLASS I, DIVISION 2.
WARNING - EXPLOSION HAZARD - DO NOT DISCONNECT EQUIPMENT UNLESS POWER HAS BEEN SWITCHED OFF OR THE AREA IS KNOWN TO BE NON-HAZARDOUS.
MAX. SURROUNDING AIR TEMPERATURE T_a = 50 °C

INFORMATION COMPLÉMENTAIRE POUR USA/CANADA

POUR UTILISATION DANS UN ENVIRONNEMENT DE DEGRÉ DE POLLUTION 2.
CET ÉQUIPEMENT EST ADAPTÉ À UNE UTILISATION SELON LA CLASS I, DIVISION 2, GROUPES A, B, C, D OU ENVIRONNEMENTS NON DANGEREUX SEULEMENT.
AVERTISSEMENT – RISQUE D'EXPLOSION – LA SUBSTITUTION DE COMPOSANTS PEUT NUIRE À LA CONFORMITÉ CLASSE I, DIVISION 2.
AVERTISSEMENT - RISQUE D'EXPLOSION – NE PAS DÉBRANCHER UN COMPOSANT AVANT D'AVOIR COUPÉ L'ALIMENTATION OU D'ÊTRE EN PRÉSENCE D'UNE ZONE NON DANGEREUSE.
MAX. TEMPÉRATURE AMBIANTE T_a = 50 °C

INSTALLATION INSTRUCTIONS

CP-E 24/20.0; CP-E 48/10.0

Primary switch mode power supplies CP-E range

Note: These instructions cannot claim to contain all detailed information of all types of this product range and can even not consider every possible application of the products. All statements serve exclusively to describe the product and have not to be understood as contractually agreed characteristics. Further information and data is obtainable from the catalogues and data sheets of this product, from the local ABB sales organisations as well as on the ABB homepage www.abb.com. Subject to change without prior notice.

Safety instructions and warnings:

Disconnect system from supply network!

Before any installation, maintenance or modification work: Disconnect the system from the supply network and protect against switching on.

Before start of operation:

Attention! Improper installation/operation may impair safety and cause operational difficulties or destruction of the unit. Before operation the following must be ensured:

- Connect to main according to the specific national regulations.
- Power supply cables and unit must be sufficiently fused. A disconnecting device has to be provided for the end product to disengage unit and supply cables from supply mains if required.
- **The protective earth conductor must be connected to the terminal ⏚ (Protection class I)**
- The secondary side of the power supply unit is not earthed and can be earthed by the user according to the needs with L+ or L-.
- Rate the output lines for the output current of the power supply and connect them with the correct polarity.
- In order to ensure sufficient air-cooling the distance to other devices has to be considered.

In operation:

- Do not modify the installation (primary and secondary side)! High current! Risk of electric arcs and electric shocks (danger to life)!
- Risk of burns: Depending on the operation conditions the enclosure can become very hot.
- The internal fuse is not user-replaceable. If the internal fuse blows, most probably the device is defective. In this case, an examination of the switch mode power supply by the manufacturer is necessary.

Warning: High voltage! Stored energy! Energy hazard at output!

The power supplies contain components with high stored energy and circuits with high voltage! Do not introduce any objects into the unit, and do not open the unit. With some units of this range the output is capable of providing hazardous energy. Ensure that the service personnel is protected against inadvertent contact with parts carrying energy.

Mounting:

1. Fasten the DIN rail (TH 35-15 or TH 35-7,5 acc. IEC/EN 60715) as shown in Fig. 1 on the mounting plate, horizontal mounting position, input terminals on bottom, respect on all sides the minimum distance of 25 mm to other units.
2. Snap on DIN rail as shown in Fig. 2
   1) Tilt the unit slightly upwards and fit the unit on the DIN rail
   2) Lift it downward until it hits the stop
   3) Press against the bottom front side for locking. Shake the unit slightly to check the locking
3. Remove the unit from the DIN rail as shown in Fig. 4. Use an insulated screwdriver for the unlocking.

Electrical connection (see Fig. 3):

Ensure correct dimensioning, stripping length and connection of the cables.

Front elements:

The green LED „OUTPUT OK“ is lightening during proper operation.
The red LED „OUTPUT LOW“ is lightening when the output voltage is too low.
Potentiometer „OUTPUT Adj“ for the adjustment of the output voltage.
Switch „single/parallel“ for selection of single or parallel operation.
Signalling contact 13-14 (solid-state, max. 60 V DC / 0,3 A) is ON when the output voltage is more than 75 %
(on 24 V devices only).

Technical data:

Data at T_a = 25 °C and rated values, unless otherwise stated.

Input circuit		**CP-E 24/20.0; CP-E 48/10.0**
Rated input voltage		115/230 V AC
Input voltage range		90-264 V AC / 120-375 V DC
Frequency range		47-63 Hz
Internal input fuse		10 A slow-acting / 250 V AC
Output circuit		
Rated output voltage / current I_r		see rating label
Tolerance of the output voltage		0 ... +1 %
Adjustment range of the output voltage		see rating label
Rated output power		480 W
Derating of the output current	55 °C < $T_a \leq$ 70 °C	see Fig. 5
Characteristic curve of output		U/I characteristic curve
Open-circuit protection		continuous open-circuit proof
Parallel connection in order to increase power		up to 3 devices, min. 0.1 I_r - max. 0.9 I_r
Isolation data		
Rated insulation voltage	input / output	3 kV AC
	input / PE	1.5 kV AC
General data		
Degree of protection	housing / terminals	IP20 / IP20
Ambient temperature range T_a	operation	-40...+70 °C (-40...158 °F)
	rated load	-40...+55 °C (-40...131 °F)
	storage	-40...+85 °C (-40...185 °F)
Dimensions (WxHxD)		175 x 123.6 x 123.6 mm (6.89 x 4.87 x 4.87 in)

Fig. 1

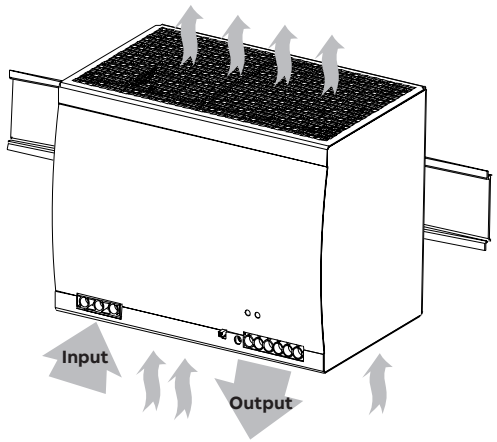

Fig. 2

