

Ultrasonic sensor

UB800-18GM40A-U-V1

- Short design, 40 mm
- Function indicators visible from all directions
- Analog output 0 ... 10 V
- Measuring window adjustable
- Program input
- Temperature compensation

Single head system

Dimensions

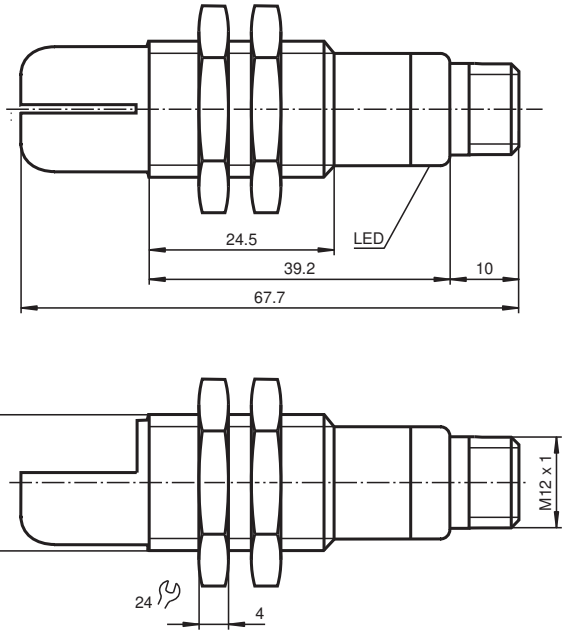

Technical Data

General specifications		
Sensing range		50 ... 800 mm
Adjustment range		70 ... 800 mm
Dead band		0 ... 50 mm
Standard target plate		100 mm x 100 mm
Transducer frequency		approx. 255 kHz
Response delay		approx. 100 ms
Indicators/operating means		
LED green		Power on

Release date: 2023-11-07 Date of issue: 2023-11-07 Filename: 205337_eng.pdf

Technical Data

LED yellow		solid yellow: object in the evaluation range yellow, flashing: program function, object detected
LED red		solid red: Error red, flashing: program function, object not detected
Electrical specifications		
Operating voltage	U_B	15 ... 30 V DC , ripple 10 %$_{SS}$
No-load supply current	I_0	≤ 20 mA
Input		
Input type		1 program input lower evaluation limit A1: -U_B ... +1 V, upper evaluation limit A2: +4 V ... +U_B input impedance: > 4.7 kΩ, pulse duration: ≥ 1 s
Output		
Output type		1 analog output 0 ... 10 V
Default setting		evaluation limit A1: 70 mm evaluation limit A2: 800 mm
Resolution		0.4 mm at max. sensing range
Deviation of the characteristic curve		± 1 % of full-scale value
Repeat accuracy		± 0.5 % of full-scale value
Load impedance		> 1 kOhm
Temperature influence		± 1.5 % of full-scale value
Compliance with standards and directives		
Standard conformity		
Standards		EN IEC 60947-5-2:2020 IEC 60947-5-2:2019 EN 60947-5-7:2003 IEC 60947-5-7:2003
Approvals and certificates		
UL approval		cULus Listed, Class 2 Power Source
CCC approval		CCC approval / marking not required for products rated ≤36 V
Ambient conditions		
Ambient temperature		-25 ... 70 °C (-13 ... 158 °F)
Storage temperature		-40 ... 85 °C (-40 ... 185 °F)
Mechanical specifications		
Connection type		Connector plug M12 x 1 , 4-pin
Housing length		57 mm
Housing diameter		18 mm
Degree of protection		IP67
Material		
Housing		brass, nickel-plated
Transducer		epoxy resin/hollow glass sphere mixture; foam polyurethane, cover PBT
Mass		25 g

Connection

Standard symbol/Connections:
(version U)

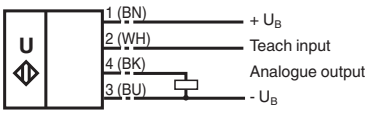

Core colours in accordance with EN 60947-5-2.

Release date: 2023-11-07 Date of issue: 2023-11-07 Filename: 205337_eng.pdf

Connection Assignment

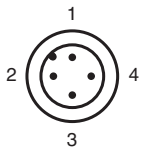

Wire colors in accordance with EN 60947-5-2

1	BN	(brown)
2	WH	(white)
3	BU	(blue)
4	BK	(black)

Characteristic Curve

Characteristic response curve

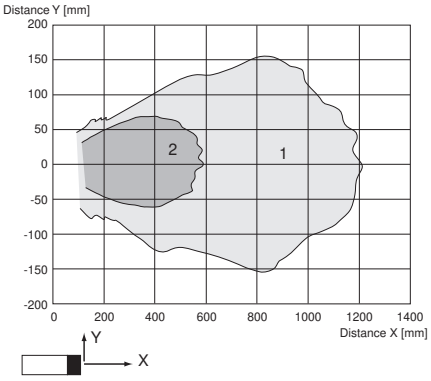

Curve 1: flat surface 100 mm x 100 mm
Curve 2: round bar, Ø 25 mm

Programming the analog output mode

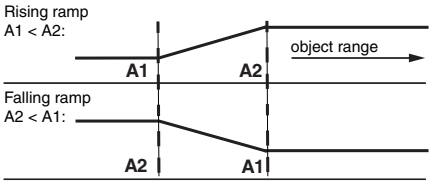

A1 -> ∞, A2 -> ∞: Detection of object presence

Object detected: 10 V
No object detected: 0 V

Programming

The sensor features a programmable analog output with two programmable evaluation boundaries. Programming the evaluation boundaries and the operating mode is done by applying the supply voltage $-U_B$ or $+U_B$ to the Teach-In input. The supply voltage must be applied to the Teach-In input for at least 1 s. LEDs indicate whether the sensor has recognized the target during the programming procedure.

Note:
Evaluation boundaries may only be specified directly after Power on. A time lock secures the adjusted switching points against unintended modification 5 minutes after Power on. To modify the evaluation boundaries later, the user may specify the desired values only after a new Power On.

Note:
If a programming adapter UB-PROG2 is used for the programming procedure, button A1 is assigned to $-U_B$ and button A2 is assigned to $+U_B$.

Release date: 2023-11-07 Date of issue: 2023-11-07 Filename: 205337_eng.pdf

Programming

Programming the analog output
Rising ramp
1. Place the target at the near end of the desired evaluation range
2. Program the evaluation boundary by applying $-U_B$ to the Teach-In input (yellow LED flashes)
3. Disconnect the Teach-In input from $-U_B$ to save the evaluation boundary
4. Place the target at the far end of the desired evaluation range
5. Program the evaluation boundary by applying $+U_B$ to the Teach-In input (yellow LED flashes)
6. Disconnect the Teach-In input from $+U_B$ to save the evaluation boundary

Falling ramp
1. Place the target at the far end of the desired evaluation range
2. Program the evaluation boundary by applying $-U_B$ to the Teach-In input (yellow LED flashes)
3. Disconnect the Teach-In input from $-U_B$ to save the evaluation boundary
4. Place the target at the near end of the desired evaluation range
5. Program the evaluation boundary by applying $+U_B$ to the Teach-In input (yellow LED flashes)
6. Disconnect the Teach-In input from $+U_B$ to save the evaluation boundary

Release date: 2023-11-07 Date of issue: 2023-11-07 Filename: 205337_eng.pdf