E20590

Angle support for photoelectric sensors

90 DEG ATTACHMENT FOR OF

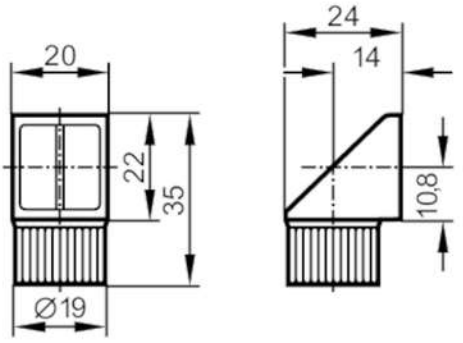

Mechanical data		
Weight	[g]	8.9
Materials		housing: ABS; lens: PC
Remarks		
Pack quantity		1 pcs.
Diagrams and graphs		