DX2021

Multifunction display for monitoring revolution, speed and time

DISPLAY/FX460/AC/DC

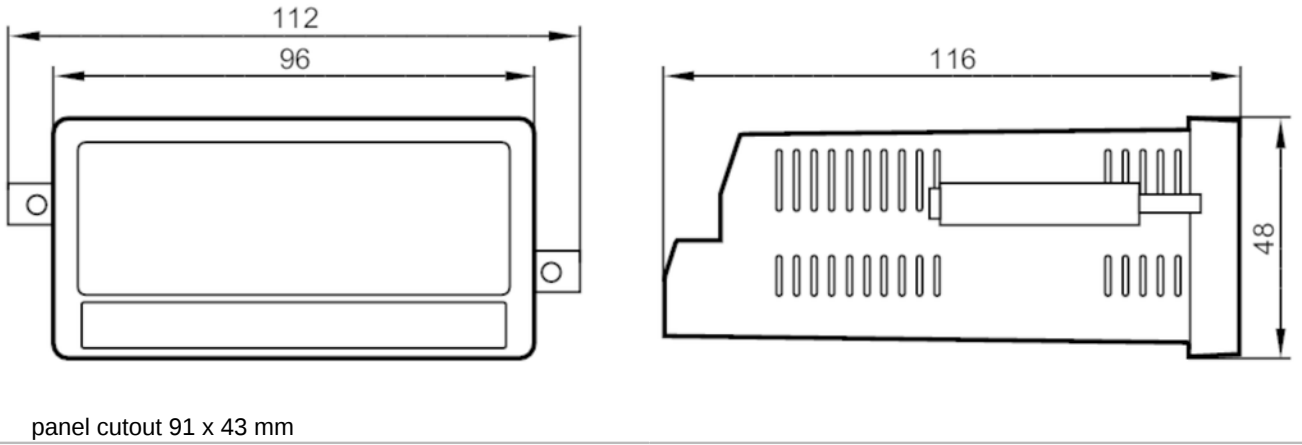

panel cutout 91 x 43 mm

Product characteristics		
Housing		housing for panel mounting
Dimensions	[mm]	48 x 112 x 116
Application		
Application		universal evaluation and display for all physical units which can be derived from pulse sequences
Electrical data		
Frequency AC	[Hz]	50...60
Operating voltage	[V]	115...230 AC / 18...30 DC
Current consumption	[mA]	100
Inputs / outputs		
Number of inputs and outputs		Number of digital inputs: 2
Inputs		
Number of digital inputs		2
Operating conditions		
Ambient temperature	[°C]	-20...60
Storage temperature	[°C]	-25...70
Protection		IP 65
Protection rating terminals		IP 20
Tests / approvals		
EMC		EN 61000-6-2
		EN 61000-6-3
		EN 61000-6-4
Mechanical data		
Weight	[g]	355
Housing		housing for panel mounting
Type of mounting		installation in panels or panel cutouts; (panel cutout: 91 x 43 mm)
Dimensions	[mm]	48 x 112 x 116
Materials		Noryl UL94-V-0

DX2021

Multifunction display for monitoring revolution, speed and time

DISPLAY/FX460/AC/DC

Displays / operating elements		
Display	colour display	full graphic LCD display, touch screen

Electrical connection
screw terminals:
Connection

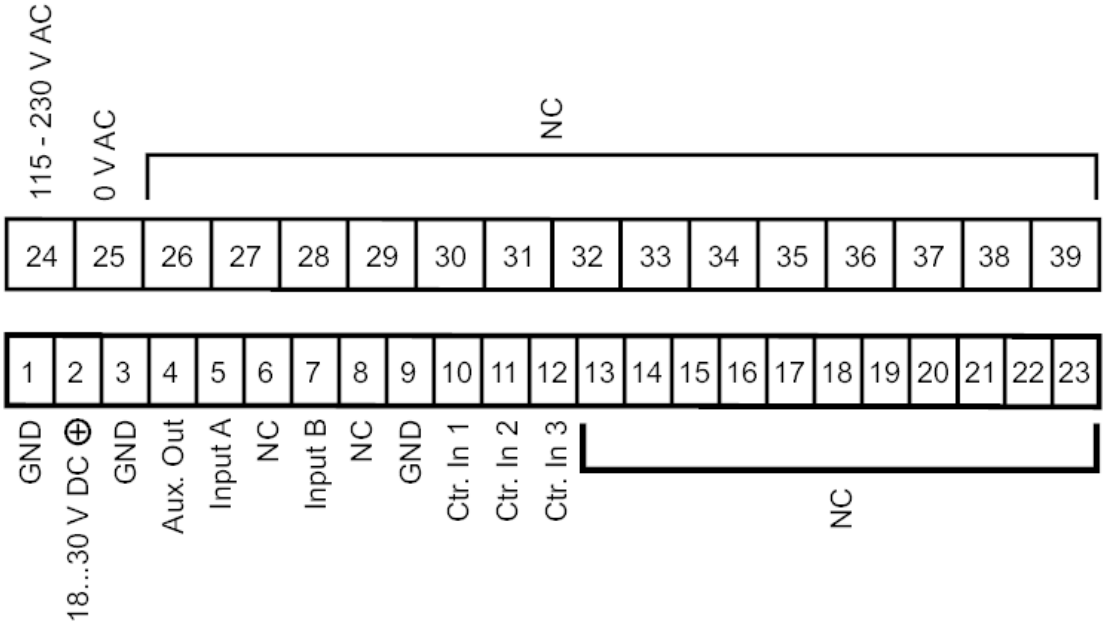

NC: not used