Technical data sheet
Single light beam safety device transmitter
Part no.: 50121907
SLS46C-70.K28-M12



For Illustration purposes only

Contents

- Technical data
- Dimensioned drawings
- Electrical connection
- Operation and display
- Suitable receivers
- Notes
- Further information
- Accessories

Technical data

Basic data

Series	46C

Functions

Functions	Activation input

Characteristic parameters

Type	2, IEC/EN 61496, in combination with a suitable test monitoring unit, e.g. MSI-TR1B
SIL	1, IEC 61508, in combination with a suitable test monitoring unit, e.g. MSI-TR1B
SILCL	1, IEC/EN 62061, in combination with a suitable test monitoring unit, e.g. MSI-TR1B
Performance Level (PL)	c, EN ISO 13849-1:2008, In combination with a suitable test monitoring unit, e.g. MSI-TR1B
$MTTF_d$	400 years, EN ISO 13849-1
PFH_D	3E-10 per hour
Mission time T_M	20 years, EN ISO 13849-1
Category	2, EN ISO 13849, In combination with a suitable test monitoring unit, e.g. MSI-TR1B

Optical data

Operating range	5 ... 70 m
Operating range limit	5 ... 80 m
Light source	LED, Red
Wavelength	630 nm
Transmitted-signal shape	Pulsed
LED group	1
Opening angle, max.	-5 ... 5 °

Electrical data

Protective circuit	Polarity reversal protection
	Short circuit protected

Performance data

Supply voltage U_B	24 V, DC, -20 ... 20 %, Incl. residual ripple
Residual ripple	10 %, From U_B
Open-circuit current	0 ... 40 mA

Inputs

Number of activation inputs	1 Piece(s)

Activation inputs

Voltage type	DC
Switching voltage	high: ≥8V
	low: ≤ 1.5 V
Switching voltage high, min.	8 V
Switching voltage low, max.	1.5 V
Activation/disable delay	1 ms
Input resistance	10,000 Ω, -30 ... 30 %

Activation input 1

Assignment	Connection 1, pin 4
Active switching state	High

Time behavior

Switching frequency	250 Hz
Response time	2.5 ms
Readiness delay	300 ms

Connection

Number of connections	1 Piece(s)

Connection 1

Function	Signal IN
	Voltage supply
Type of connection	Connector
Thread size	M12
Material	Plastic
No. of pins	4 -pin

Mechanical data

Design	Cubic
Dimension (W x H x L)	20.5 mm x 76.3 mm x 44 mm
Housing material	Plastic
Plastic housing	PC-PBT
Lens cover material	Plastic / PMMA
Net weight	50 g
Housing color	Red
Type of fastening	Through-hole mounting
Compatibility of materials	ECOLAB

Operation and display

Type of display	LED
Number of LEDs	2 Piece(s)

Environmental data

Ambient temperature, operation	-30 ... 60 °C
Ambient temperature, storage	-30 ... 70 °C

Certifications

Degree of protection	IP 67
	IP 69K
Protection class	III, Rating voltage 50 V
Approvals	c TÜV NRTL US
	c UL US
	TÜV Süd
Standards applied	IEC 60947-5-2, IEC/EN 61496

Technical data

Customs tariff number	85365019
ECLASS 5.1.4	27272701
ECLASS 8.0	27272701
ECLASS 9.0	27272701
ECLASS 10.0	27272701
ECLASS 11.0	27272701
ECLASS 12.0	27272701
ECLASS 13.0	27272701
ECLASS 14.0	27272701
ECLASS 15.0	27272701
ETIM 5.0	EC001831
ETIM 6.0	EC001831
ETIM 7.0	EC001831
ETIM 8.0	EC001831
ETIM 9.0	EC001831
ETIM 10.0	EC001831

Dimensioned drawings

All dimensions in millimeters

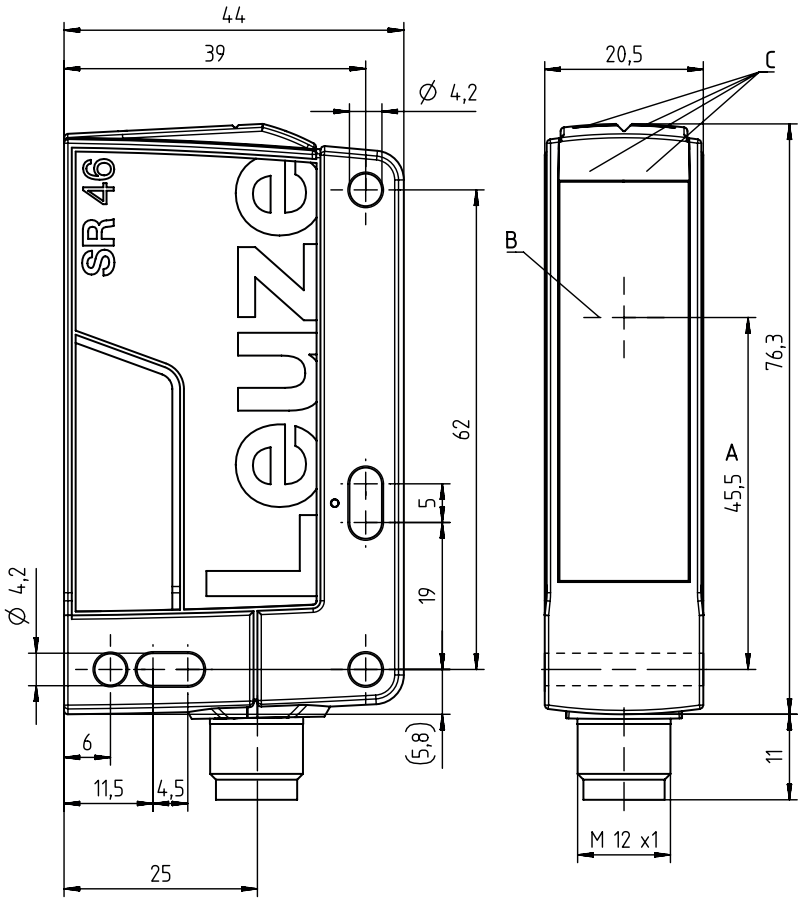

A Optical axis
B Transmitter and receiver
C Green/yellow indicator diodes

Electrical connection

Connection 1

Function	Signal IN
	Voltage supply
Type of connection	Connector
Thread size	M12
Type	Male
Material	Plastic
No. of pins	4 -pin
Encoding	A-coded

Pin	Pin assignment	Conductor color
1	+24 V	Brown
2	n.c.	White
3	GND	Blue
4	Active	Black

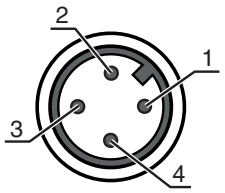

Operation and display

LED	Display	Meaning
1	Green, continuous light	Ready
2	Yellow, continuous light	Transmitter activated

Suitable receivers

	Part no.	Designation	Article	Description
	50121915	SLE46C-70.K2/4P-M12	Single light beam safety device receiver	Response time: 2.5 ms Connection: Connector, M12, Plastic, 4 -pin

Notes

Observe intended use!

- The product may only be put into operation by competent persons.
- Only use the product in accordance with its intended use.

For UL applications:

- Certification: UL 508, C22.2 No.14-13
- Only for use in "class 2" circuits
- These proximity switches shall be used with UL Listed Cable assemblies rated 30V, 0.5A min, in the field installation, or equivalent (categories: CYJV/CYJV7 or PVVA/PVVA7)

Further information

- Typ. operating range limit: max. attainable range without function reserve
- Operating range: recommended range with function reserve
- Light source: Average life expectancy 100,000 h at an ambient temperature of 25 °C

Accessories

Connection technology - Connection unit

	Part no.	Designation	Article	Description
	547958	MSI-TR1B-01	Safety relay	
	547959	MSI-TR1B-02	Safety relay	

Connection technology - Connection cables

	Part no.	Designation	Article	Description
	50130690	KD U-M12-4W-V1-050	Connection cable	Connection 1: Connector, M12, Angled, Female, A-coded, 4 -pin Connector, LED: No Connection 2: Open end Shielded: No Cable length: 5.000 mm Sheathing material: PVC

Mounting technology - Mounting brackets

	Part no.	Designation	Article	Description
	50105315	BT 46	Mounting device	Design of mounting device: Angle, L-shape Fastening, at system: Through-hole mounting Mounting bracket, at device: Screw type Type of mounting device: Rigid Material: Metal

Accessories

Mounting technology - Rod mounts

	Part no.	Designation	Article	Description
	50122797	BTU 346M-D12	Mounting system	Design of mounting device: Mounting system Fastening, at system: For 12 mm rod, Sheet-metal mounting Mounting bracket, at device: Screw type Type of mounting device: Turning, 360°, Adjustable, Clampable Material: Metal

Muting - Mounting systems

	Part no.	Designation	Article	Description
	50117252	BTU 300M-D12	Mounting system	Design of mounting device: Mounting system Fastening, at system: For 12 mm rod, Sheet-metal mounting Mounting bracket, at device: Screw type, Suited for M4 screws Type of mounting device: Clampable, Adjustable, Turning, 360° Material: Metal

Note

A list with all available accessories can be found on the Leuze website in the Download tab of the article detailed page.