SWE-N55L

- loop-powered indicator in a small wall case
- measurement input 4-20 mA
- optional alarm output available
- peak values detection



IR remote controller
SIR-15

SWE-N55L is a simple and low cost digital indicator with a single 4-20 mA current input, which powers this device at the same time. Measurement input is equipped with safety circuits, saving internal electronics against overload. Device has possibilities of recalculating measured current according to few predefined transfer functions (linear, square, square root) or fully definable user characteristic (max. 20 points). Result is displayed on 4-digit red LED display, the range of the result is from -999 to 9999, with definable decimal point position. The device can be equipped with optional relay (signalisation by LED on front panel). Due to users safety requirements this output can drive a bulb lamp as well as sound signalling device but must not be used for controlling purposes. Configuration of the device can be done using IR remote controller (when input current is higher than 10 mA, what is signalised by additional LED).
Remote controller is not a part of the **SWE-N55L** and is available on request as optional equipment.

- supply from the current loop,
- detection and visualization of the peak values,
- IR remote controller as accessory.

Typical applications

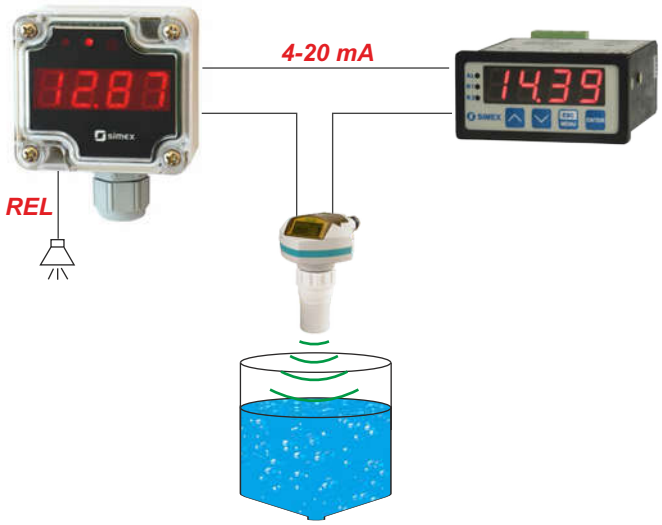

Examplary pin assignment

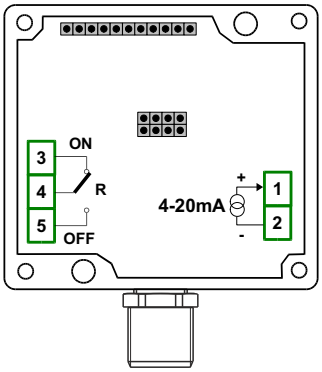

Terminals description
(inside the housing)

Terminals description
(version with M12 connector)

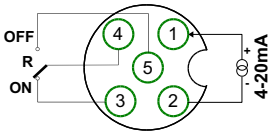

Technical data

Power supply: from measurement line, min. current 3.5 mA, max. voltage drop 7V
Display: LED, red, 4 x 13 mm high
Input: current 4-20 mA, overload-protected, input current limited to about 50 mA
Displayed values range: -999 ÷ 9999 plus decimal point
Accuracy: 0.1% @25°C
Stability: 50 ppm/°C
Output (option): 1 x bistable relay 30V/500 mA, min. switching delay: about 4 sec.
Data memory: non-volatile memory, EEPROM type
Operating temperature: 0°C ÷ +50°C (standard), -20°C ÷ +50°C (option)
Storage temperature: -10°C ÷ +70°C (standard), -20°C ÷ +70°C (with option **08**)
Protection class: IP 65
Case: wall-mounted
Case material: ABS + polycarbonate
Case dimensions: without gland/connector: 64 x 58 x 36 mm; with gland: 64 x 82 x 36 mm; with M12 connector: 64 x 73 x 36 mm
Weight: with gland 108 g, with M12 connector 126 g
Connection: gland M16x1,5 (standard); socket M12, 5-pin + straight cable plug, 5-pin, with PG7 gland (option)

Ordering

SWE-N55L-11XX-0-9-XX1

number of outputs:
0
1

options:
00 : no options
08 : operating temp. -20°C ÷ +50°C
0Y : M12, 5 pin
0Z : M12, 5 pin; -20°C ÷ +50°C

type of outputs:
0 : no output
1 : REL

Accessories



IR remote controller
SIR-15

80-556 Gdańsk, Wielopole 7, POLAND, tel. (+48 58) 762-07-77, fax 762-07-70, www.simex.pl, e-mail: info@simex.com.pl