PSL1M03312

Modular switching power supply, single-phase. 12VDC, 2.75A/33W



Product designation			Modular switching power supplies
Product type designation			PSL1M
Input characteristics			
Input type			Single-phase
Rated supply voltage AC		VAC	Multivoltage 100...240
Operating range			
AC			
	min	VAC	90
	Max	VAC	264
DC			
	min	VDC	120
	Max	VDC	375
Rated frequency		Hz	50/60
Operational frequency			
	min	Hz	47
	max	Hz	63
Current consumption Max		mA	900
PFC			No
Insulation voltage Input/Output			
	AC	VAC	3000
	DC	VAC	4242
Internal fuse (250VAC)			T2A 250VAC
Output characteristics			
Rated output voltage DC		VDC	12
Voltage trimming (potentiometer) DC			
	min	VDC	12
	Max	VDC	14
Rated output current		A	2.75
Rated output power		W	33
Temperature coefficient		%/°C	±0.03
Line adjustment		%	±1
Load adjustment		%	±1
Efficency		%	83
Overload protection			110…150%
Short-circuit protection			Fold forward
Ripple & noise		mV	50
Parallel connection		Nr.	No
Indications			
LED indicator for power on			Yes
LED indicator for low voltage			Yes
Connections			
Terminals type			Screw
Ambient conditions			

The characteristics described in this document are subject to updates or modifications at any time. The descriptions, technical and functional information, illustrations and instructions in this brochure are purely illustrative, and are consequently not contractually binding

PSL1M03312

Modular switching power supply, single-phase. 12VDC, 2.75A/33W

Temperature				
	Operating temperature			
		min	°C	-40
		max	°C	+71
	Storage temperature			
		min	°C	-40
		max	°C	+85
Derating			%/°C	2.5%/°C above 56°C

Housing

Execution (n° of modules)		3
Material		Plastic
IEC degree of protection		IP20
Dimensions (W x H x D)	mm	53 x 96 x 56.2
Weight	g	248

Installations

Mounting	On 35mm DIN rail

Dimensions

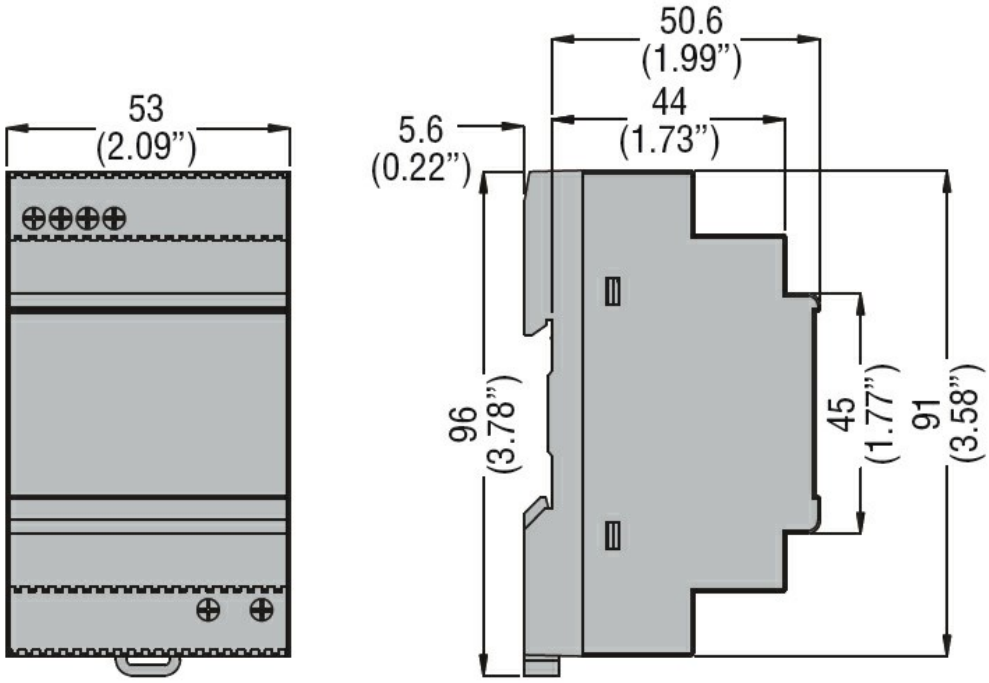

Wiring diagrams

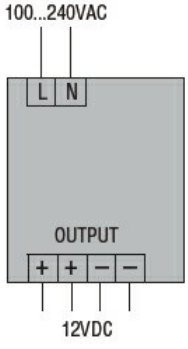

Certifications and compliance

Compliance	
	CSA C22.2 n°14

The characteristics described in this document are subject to updates or modifications at any time. The descriptions, technical and functional information, illustrations and instructions in this brochure are purely illustrative, and are consequently not contractually binding

	IEC/EN/BS 61000-6-2
	IEC/EN/BS 61000-6-3
	IEC/EN/BS 62368-1
	UL 508
Certificates	
	cULus
	EAC
	RCM

ETIM classification

ETIM 8.0	EC002540 - DC-power supply

The characteristics described in this document are subject to updates or modifications at any time. The descriptions, technical and functional information, illustrations and instructions in this brochure are purely illustrative, and are consequently not contractually binding