M/800
Heavy duty flow regulator, uni-directional

- Port size: G1/8 ... G1
- Line mounted general purpose regulators
- Captive regulating needle will not blow out when unscrewed
- Calibrated adjusting knob, can be locked
- Suitable for wall mounting
- High operating pressure



Technical features

Medium:
Compressed air, filtered, lubricated or non-lubricated

Operation:
Heavy duty flow regulators (uni-directional)

Operating pressure:
0,3 ... 16 bar (4 ... 232 psi)

Port size:
1/8", 1/4", 1/2", 3/4", 1"

Mounting:
Line mounted

Ambient/Media temperature:
-20 ... +80°C max. (-4 ... 176°F)
(alternative models to 150°C (+302°F))
Air supply must be dry enough to avoid ice formation at temperatures below +2°C. (+35°F)

Materials:
./836, ./837, ./839
Body, adjusting knob and locking ring: brass
Seals: NBR
./840, ./855
Body, adjusting knob and ocking ring: aluminium
Seals: NBR

Technical data, standard models

Symbol	Port size	Max. regulated flow factor			Free flow factor			Metered/ free flow at 6 - 5 bar	Weight (kg)	Spare kit	Model
		C *1)	Cv	Kv *2)	C *1)	Cv	Kv *2)				
	G 1/8	0,7	0,17	0,15	2,1	0,6	0,45	170/ 509	0,10	QS/520/00	S/836
	G 1/4	2	0,49	0,43	4,3	1	0,92	486/ 1040	0,15	QS/521/00	M/837
	G 1/2	12	2,9	2,56	17	4,1	3,62	2894/ 4002	0,60	QS/522/00	M/839
	G 3/4	18	4,4	3,83	38	9,3	8,09	5330/ 9146	1,20	QS/523/00	M/840
	G 1	36	8,8	7,67	45	11	9,60	8671/ 10853	3,50	QS/524/00	M/855

*1) Measured in dm3/(s.bar)
*2) Measured in m3/h

Options selector

★★/8★★

Alternative models	Substitute
High temperature +150°C max	T
Thread form	**Substitute**
ISO G, parallel, 1/8 only	S
ISO G, parallel	M
NPT *	C

Port size	Substitute
1/8"	36
1/4"	37
1/2"	39
3/4"	40
1"	55

* NPT = Products are finished with National Pipe Straight Threads for Couplings, which are specifically designed to made with NPT male threads.

Spare kits for NPT version are:
QC/5.... instead of QS/5....

Our policy is one of continued research and development. We therefore reserve the right to amend, without notice, the specifications given in this document. (1996 - 5223d) © 2024 Norgren Ltd.

Dimensions

Dimensions in mm
Projection/First angle

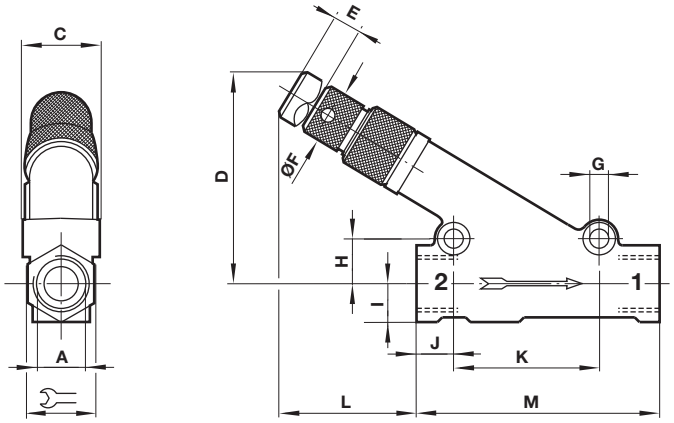

A	C	D (max.)	E	Ø F	Ø G	H	I	J	K	L (max.)	M		Model
G1/8	17	38	6,5	8,5	5,1	8,5	8,0	5,0	24,5	27,5	46	13	S/836
G1/4	22	37,5	7,5	11,5	5,2	11,0	9,5	6,0	41,0	25	60	17	M/837
G1/2	28	80	13	20,5	8,3	17,0	16,0	13,0	57,0	53	95	28	M/839
G3/4	38	104	13	25,5	8,30	21,5	17,5	20,5	76,0	66	118	32	M/840
G1	52	147	22	35,5	13,0	26,0	24,0	23,0	90,0	107	150	48	M/855

Warning

These products are intended for use in industrial compressed air systems only. Do not use these products where pressures and temperatures can exceed those listed under »**Technical features/data**«.
Before using these products with fluids other than those specified, for non-industrial applications, life-support systems or other applications not within published specifications, consult Norgren Ltd.

Through misuse, age, or malfunction, components used in fluid power systems can fail in various modes.

The system designer is warned to consider the failure modes of all component parts used in fluid power systems and to provide adequate safeguards to prevent personal injury or damage to equipment in the event of such failure.
System designers must provide a warning to end users in the system instructional manual if protection against a failure mode cannot be adequately provided.
System designers and end users are cautioned to review specific warnings found in instruction sheets packed and shipped with these products.

Our policy is one of continued research and development. We therefore reserve the right to amend, without notice, the specifications given in this document. (1996 - 5223d) © 2024 Norgren Ltd.