E75396

DIN rail adapter

Mounting plate push button

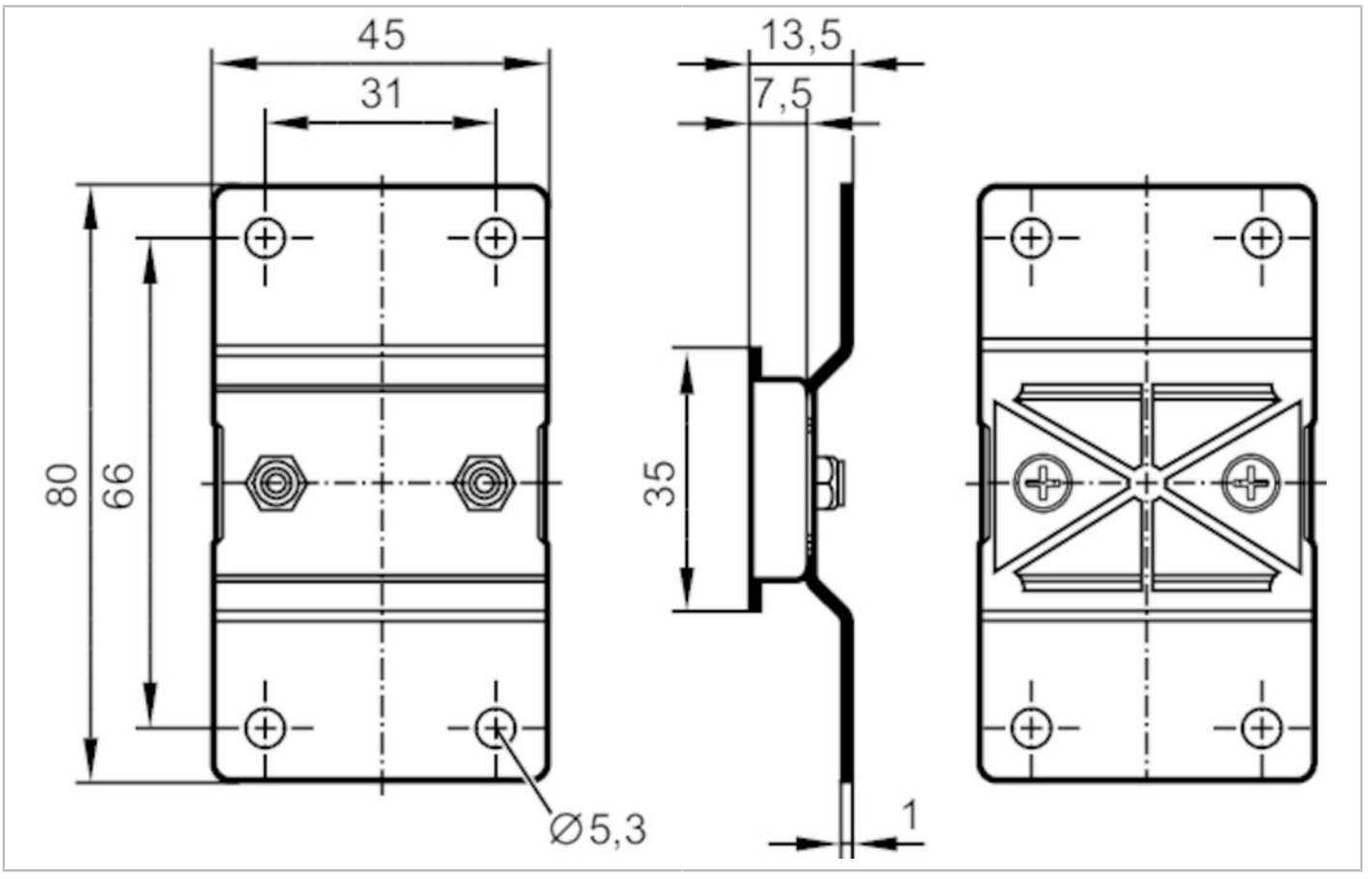

Application		
Design		suited for illuminated pushbutton modules, AC2386, AC2388, AC2396, AC2398
Mechanical data		
Weight	[g]	43
Materials		Mounting plate: stainless steel (304/1.4301); DIN rail adapter: PC; lock nuts: galvanised
Remarks		
Pack quantity		1 pcs.