CASM-40

Brushless DC motor BG 75 and adapters

CASM-40 linear units with brushless DC motors are perfectly suited to replace pneumatic cylinders in many applications.

It is a very simple system to set up. Connect the motor to a 40 V DC power supply and program up to 14 motion profiles with your computer and the programming accessory kit.

After programming the motor, the motion profile can be activated by 2 – 4 binary signals (PLC outputs or switches) and the actuator will run to the defined position.

The brushless DC motor, BG 75 75 PI, comes with an internal encoder with 4 096 counts per turn for high positioning accuracy. The internal brake is activated after each movement to secure the system in case of a power loss and to give the motor time to cool down when not in operation.

The brake also enables an increase in the power performance of a full motion cycle.

For more information, please visit the following site: www.skf.com/casm



Load / linear speed diagram

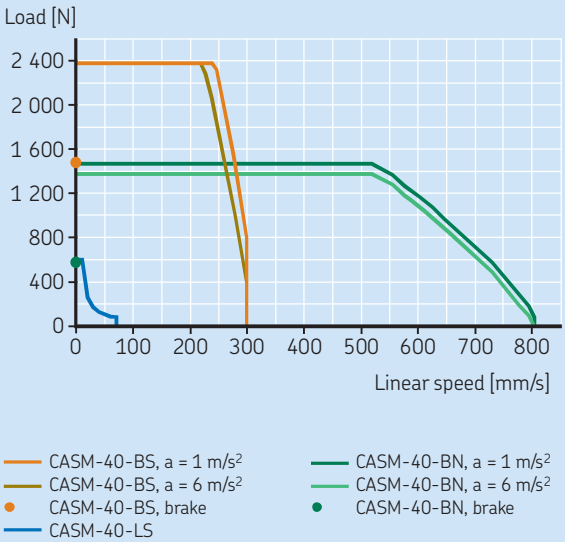

Load = force acting on the actuator
(gravity force + acceleration force + constant force)

rder numbers for a complete actuator

	rder No.
Linear unit according to your needs	See CASM-40 Linear units
Brushless DC motor BG 75 75 PI	BG75X75PI
Adapter kit, parallel or in-line	ZBE-37557x, see below
Accessories according to your needs	See CASM-40 Accessories
Cable kit for BG 75	ZBE-530630-xx, see below

Accessories

	rder No.
Programming kit for BG motor series	ZBE-530615
Cable kit 3 m for BG 75	ZBE-530630-03
Cable kit 10 m for BG 75	ZBE-530630-10
Replacement belt for parallel adapter	ZBE-375600-63

BLDC motor BG 75x75 PI
with PI interface and brake

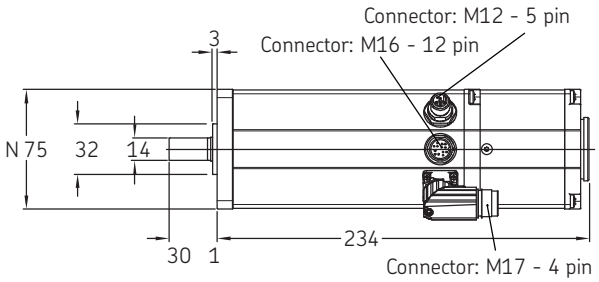

rder No.:
BG75X75PI

Motor data

	Symbol	Unit	BG 75x75 PI
Nominal torque (100 K)	M	Nm	1.16
Stall torque (20 °C)	M_0	Nm	4.1
Nominal rotational speed	w	1/min	3 700
Nominal voltage	U	V DC	40
Nominal current (100 K)	I	A	12.7
Peak current (2 s)	I_{peak}	A	50
Max. output power (20 °C)	P_{out}	kW	0.95
Inertia with brake	J	kgm^2	0.062
Weight with brake	m	kg	3.08

Parallel adapter kit
for CASM-40 and BLDC motor BG 75

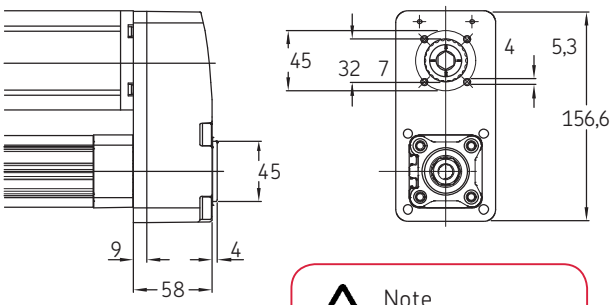

Note
For swivel flanges
see CASM-63 Accessories.

rder No.:
ZBE-375578



System capabilities

	F_{peak}	F_m [1)]	v_{max}
CASM-40-LS	600 N	600 N	70 mm/s
CASM-40-BS	2 375 N	1 020 N	300 mm/s
CASM-40-BN	1 484 N	459 N	825 mm/s

[1)] Mean load over full cycle. For more information please visit skf.com/casm

In-line adapter kit
for CASM-40 and BLDC motor BG 75

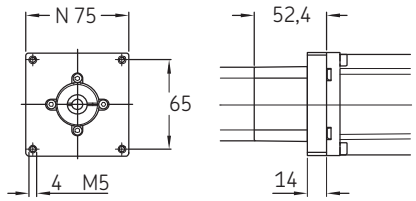

rder No.:
ZBE-375579



System capabilities

	F_{peak}	F_m [1)]	V_{max}
CASM-40-LS	600 N	600 N	70 mm/s
CASM-40-BS	2 375 N	1 020 N	300 mm/s
CASM-40-BN	1 484 N	459 N	825 mm/s

[1)] Mean load over full cycle. For more information please visit skf.com/casm

® SKF is a registered trademark of the SKF Group.

© SKF Group 2014
The contents of this publication are the copyright of the publisher and may not be reproduced (even extracts) unless prior written permission is granted. Every care has been taken to ensure the accuracy of the information contained in this publication but no liability can be accepted for any loss or damage whether direct, indirect or consequential arising out of the use of the information contained herein.

PUB MT/P8 14793 EN · September 2014