8BCR0001.11230-0

1 General information

- Can be used in cable drag chains
- Assembled specifically for resolver cables 8BCRxxxx.1121A-0
- itec - Innovative connector system for secure connections

2 Order data

Model number	Short description	Figure
	Resolver Cables SpringTec connector	
8BCR0001.11230-0	Cable extension for resolver cables with series 615 signal connector, length 1 m, can be used in cable drag chains	

Table 1: 8BCR0001.11230-0 - Order data

3 Technical data

Model number	8BCR0001.11230-0
General information	
Cable cross section	3x 2x 24 19 AWG
Durability	Oil resistance per VDE 0472 Part 803 as well as standard hydraulic oils [1]
Certification	UL AWM Style 20671, 90°C, 30 V, E63216 and CSA AWM, 90°C, 30 V, I/II A/B FT1 LL46064 [1]
Certifications	
CE	Yes
UL	cULus E225616 Power conversion equipment
Cable construction	
Signal line	
Quantity	6
Wire insulation	Special thermoplastic material
Wire colors	White/Brown, green/yellow, gray/pink
Variant	Tinned copper stranded wire
Cross section	24 AWG / 19 AWG
Shield	No
Stranding	White with brown, green with yellow, gray with pink
Cable stranding	The 3 pairs together covered by foil shield
Cable shield	Copper braiding, optical coverage ≥90% and foil shield
Outer jacket	
Material	PUR
Color	Green, similar to RAL 6018 flat
Labeling	B&R 3x2x24 AWG FLEX UL AWM STYLE 20671 90°C 30 V E63216 CSA AWM 90°C 30 V I/II A/B FT1 LL46064 [1]
Connector	
Type	12-pin female series 615 signal connector
Mating cycles	<500
Contacts	12
Additional connectors	12-pin male coupling Mating cycles: <500 Contacts: 12 Degree of protection per EN 60529: IP66/67 when connected
Degree of protection per EN 60529	IP66/67 when connected
Electrical properties [1]	
Operating voltage	≤30 V_{eff}
Test voltage	
Wire - Wire	1.5 kV
Wire - Shield	0.8 kV
Conductor resistance	
Signal line	≤86 Ω/km
Insulation resistance	>200 MΩ*km
Ambient conditions [1]	
Temperature	
Moving	-20°C to +80°C
Static	-20°C to +90°C

Table 2: 8BCR0001.11230-0 - Technical data

Model number	8BCR0001.11230-0
Mechanical properties [1]	
Dimensions	
Length	1 m
Diameter	6.5 mm ±0.2 mm
Bend radius	
Single bend	≥20 mm
Moving	≥50 mm
Drag chain data	
Acceleration	≤6 g
Flex cycles [2]	>3,000,000
Velocity	≤4 m/s
Weight	70 g

Table 2: 8BCR0001.11230-0 - Technical data

1) Values refer to the raw cable being used.
2) At an ambient temperature of 20°C and bend radius of 65 mm.

4 Wiring

4.1 Cable construction

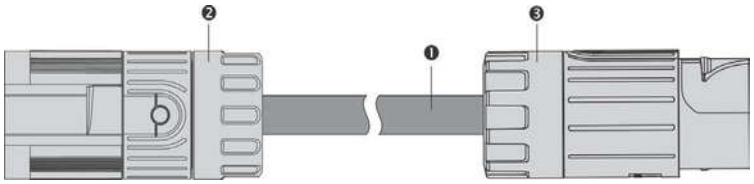

Pos.	Description	Note
1	Encoder line	3x 2x 24 AWG/19
2	12-pin female circular connector	
3	12-pin male coupling	

Table 3: 8BCR cable extension - Construction

4.2 Pinout

Circular connector	Pin	Description	Function	Pin	Coupling
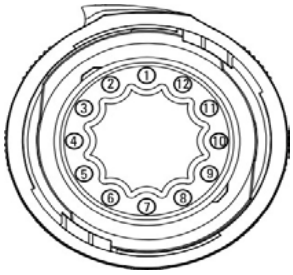	1	---	Coding contact		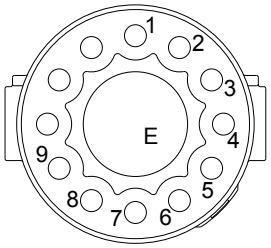
	2	---			
	3	---			
	4	---			
	5	---			
	6	R1	Reference output inverted	6	
	7	---			
	8	S4	Sine input +	8	
	9	S2	Sine input -	9	
	10	S3	Cosine input +	10	
	11	S1	Cosine input -	11	
	12	R2	Reference output	12	

Table 4: 8BCR cable extension - Pinout

4.3 Cable diagram

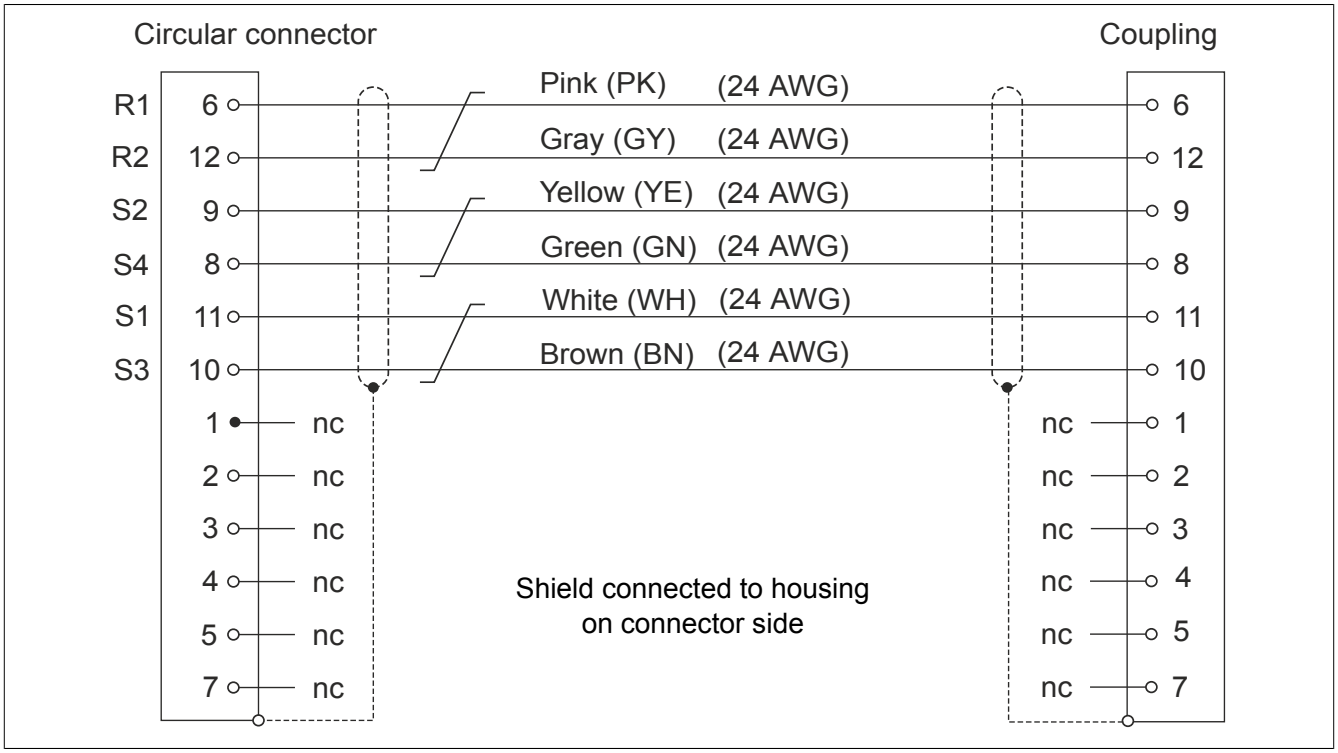

Figure 1: 8BCR cable extension - Cable diagram