

## L-O Hinge

Lift off hinge. For doors where you have high sanitary demands like in food industries, hospitals and laboratories.

| Art Nr | Note | Material | Weight / g | Treatment |
|---|---|---|---|---|
| 930855 | Right handed | SS AISI 316 | 304 | Electro polished |
| 930856 | Left handed | SS AISI 316 | 304 | Electro polished |

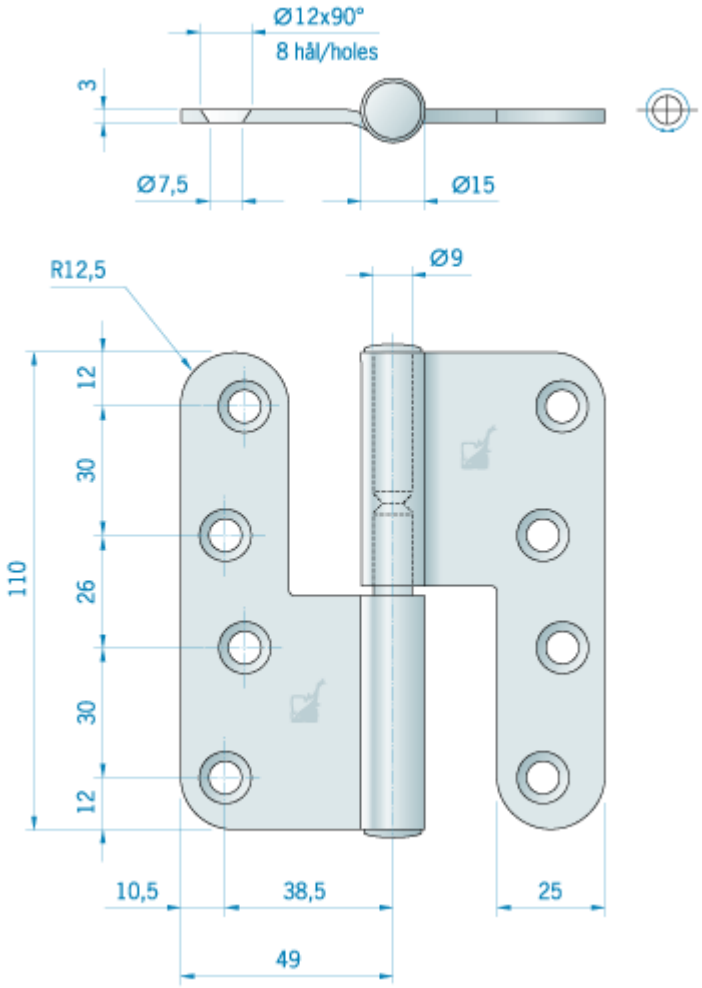


Roca Industry AB. P.O. Box 693, Radiovägen 19. SE-135 26 Tyresö. Sweden Fax: +46 8 742 32 25. e-mail: info@rocaindustry.com