Shock-Safe Fuseholder, 5 x 20 / 6.3 x 32 mm, Slotted Cap/Fingergrip, IEC: 500 VAC, UL/CSA: 600 VAC/DC



Socket with Slotted Cap
Caps must be ordered separately (see accessories)



Socket with Fingergrip Cap

500 VAC · 4 W / 10 A (VDE) · 600 VAC/DC · 20 A (UL/CSA)

Description
- Fuseholder for 500 VAC applications
- Cap is available slotted or with fingergrip

Standards
- IEC 60127-6
- UL 4248-1
- CSA C22.2 no. 4248.1

Approvals
- VDE Certificate Number: 137910
- UL File Number: E39328

Applications
- Equipment with three-phase supply (400 VAC)

Weblinks
pdf-datasheet, html-datasheet, General Product Information, Packaging details, Approvals, CE declaration of conformity, RoHS, CHINA-RoHS, REACH, Distributor-Stock-Check, Accessories, Detailed request for product

Technical Data

Shock-Safe Category	PC2
Fuse-Link	5 x 20 or 6.3 x 32 mm
Mounting	Panel Mount, Front Side
Attachment	Fixing Nut
Terminal	Solder or Quick-Connect 6.3 x 0.8 mm
Rated Voltage	500 VAC (VDE), 600 VAC/DC (UL/CSA)
Rated current	10 A (VDE), 20 A (UL/CSA)
Rated Power Acceptance IEC	4 W / 10 A @ Ta 23 °C Admissible power acceptance at higher ambient temperature see derating curves
Degree of Protection	IP 40
Protection Class	Suitable for appliances with protection class I or II acc. to IEC 61140
Admissible Ambient Air Temp.	-40 °C to 85 °C
Climatic Category	40/085/21 acc. to IEC 60068-1
Material: Socket	Thermoset, black, UL 94V-0
Material: Terminals	Tin-Plated Copper Alloy
Unit Weight	9 g / 5.36 g
Storage Conditions	0 °C to 60 °C, max. 70% r.h.
Product Marking	⊟, Type, Rated Voltage, Power Rating, Rated current, Approvals

Soldering Methods	Iron Soldering Profile
Solderability	350 °C / 2 sec acc. to IEC 60068-2-20, Test Ta, method 2
Resistance to Soldering Heat	350 °C / 10 sec acc. to IEC 60068-2-20, Test Tb, method 2
Contact Resistance	< 5 mΩ at 20 mV
Dielectric Strength	> 3 kV > 4 kV between L/N-PE (50 Hz; 1 min)
Impulse Withstand Voltage	> 4 kV between L-N > 6 kV between L/N-PE
Insulation Resistance	> 10 MΩ between L-N > 100 MΩ between L/N-PE (500 VDC; 1 min)
Overvoltage Category	I - III acc. to IEC 60664-1
Pollution Degree	1 - 2 acc. to IEC 60664-1
Admissible Torque on Fixing Nut	max 1.2 Nm
Panel Thickness s	max 9 mm

Dimension

56.5 mm

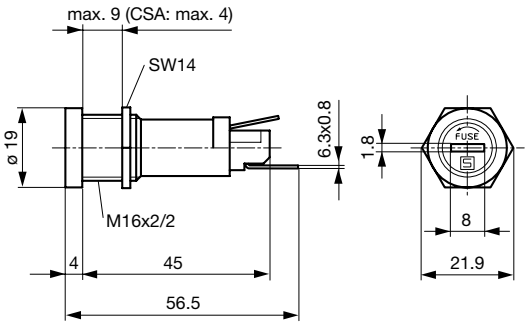

Variant with slotted cap 0031.1631 + 0031.1611/1613

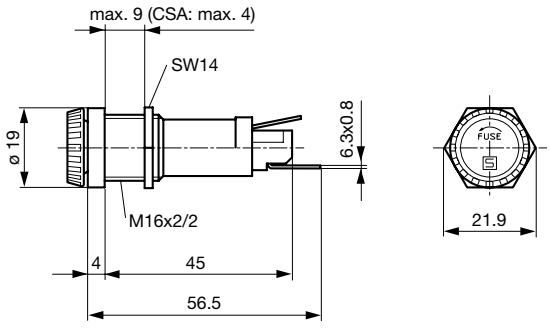

Variant Fingergrip 0031.1631 + 0031.1616

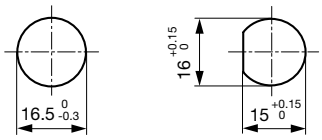

Mounting holes

Derating Curves

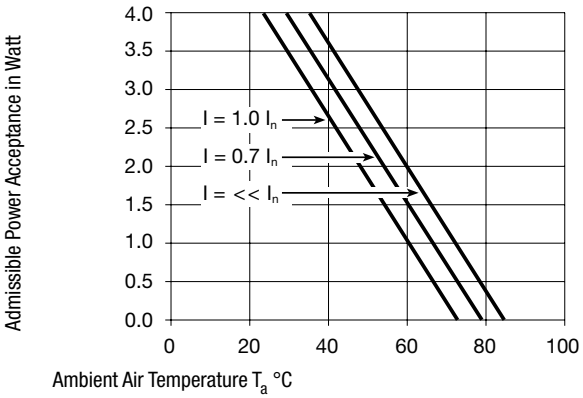

All Variants

Holder	Cap	Fuse-Link	Terminal	Degree of Protection	Remark	Order Number
●	-	5 x 20 or 6.3 x 32mm	Solder	IP 40	-	0031.1631
●	-	5 x 20 or 6.3 x 32mm	Quick-Connect 6.3 x 0.8 mm	IP 40	-	0031.1623
●	slotted	6.3 x 32mm	Quick-Connect 6.3 x 0.8 mm	IP 40	0031.1623 + 0031.1613	0031.1622
●	Fingergrip	6.3 x 32mm	Quick-Connect 6.3 x 0.8 mm	IP 40	0031.1623 + 0031.1616	0031.1624
●	slotted	5 x 20mm	Quick-Connect 6.3 x 0.8 mm	IP 40	0031.1623 + 0031.1611	0031.1621
●	slotted	5 x 20mm	Solder	IP 40	0031.1631 + 0031.1611	0031.1632
●	slotted	6.3 x 32mm	Solder	IP 40	0031.1631 + 0031.1613	0031.1633
●	Fingergrip	6.3 x 32mm	Solder	IP 40	0031.1631 + 0031.1616	0031.1634

Most Popular.

Availability for all products can be searched real-time:http://www.schurter.com/Stock-Check/Stock-Check-SCHURTER

Packaging Unit Bulk (50 pcs.)

Required Accessory



Description

Caps to FEC
Caps to Holder FEC

23.09.2016

The specifications, descriptions and illustrations indicated in this document are based on current information. All content is subject to modifications and amendments. Information furnished is believed to be accurate and reliable. However, users should independently evaluate the suitability and test each product selected for their own applications.