FMBC LL

2-stage filter for 3-phase systems with low leakage current

new



See below:
Approvals and Compliances

Description

- Terminals for three phases and ground

Applications

- Suitable for applications with RCDs
- Protection against interference voltage from the mains
- Especially designed for industrial applications such as: Frequency Converters, Stepper Motor Drives, UPS-Systems, Inverters

Weblinks

pdf data sheet, html datasheet, General Product Information, Approvals, Distributor-Stock-Check, Detailed request for product, Microsite

Technical Data

Rated Current	7 - 180 A
Rated voltage	520 VAC, 50/60 Hz
Approval for	7 - 180 A @ 50 °C / 520 VAC; 50/60 Hz
Overload Current	1.5 x Ir for 1 minute, per hour
Dielectric Strength	> 2.25 kVDC between L-L > 2.7 kVDC between L-PE Test voltage 2 sec
Number of Filter Stages	2-stage
Weight	0.75 - 9.4 kg
Material: Housing	Metal
Sealing Compound	UL 94V-0

Mounting	Screw-on mounting on chassis
Terminal	Screw clamps
Operating Temperature	-25 °C to 100 °C
Climatic Category	25/100/21 acc. to IEC 60068-1
Degree of Protection	IP20 acc. to IEC 60529
Protection Class	Suitable for appliances with protection class I acc. to IEC 61140
MTBF	> 200'000 h acc. to MIL-HB-217 F

Approvals and Compliances

Detailed information on product approvals, code requirements, usage instructions and detailed test conditions can be looked up in Details about Approvals

SCHURTER products are designed for use in industrial environments. They have approvals from independent testing bodies according to national and international standards. Products with specific characteristics and requirements such as required in the automotive sector according to IATF 16949, medical technology according to ISO 13485 or in the aerospace industry can be offered exclusively with customer-specific, individual agreements by SCHURTER.

Approvals

The approval mark is used by the testing authorities to certify compliance with the safety requirements placed on electronic products.

Approval Reference Type: FMBC LL

Approval Logo	Certificates	Certification Body	Description
	VDE Approvals	VDE	Certificate Number: 40040983
	UL Approvals	UL	UL File Number: E72928

Product standards

Product standards that are referenced

Organization	Design	Standard	Description
IEC	Designed according to	IEC 60939	Passive filters for suppressing electromagnetic interference
UL	Designed according to	UL 1283	Electromagnetic interference filters

Application standards

Application standards where the product can be used

Organization	Design	Standard	Description
IEC	Designed for applications acc.	IEC/UL 62368-1	Audio/video, information and communication technology equipment - Part 1: Safety requirements

Compliances

The product complies with following Guide Lines

Identification	Details	Initiator	Description
CE	CE declaration of conformity	SCHURTER AG	The CE marking declares that the product complies with the applicable requirements laid down in the harmonisation of Community legislation on its affixing in accordance with EU Regulation 765/2008.
UKCA	UKCA declaration of conformity	SCHURTER AG	The UKCA marking declares that the product complies with the applicable requirements laid down in the British Amendment of Regulation (EC) 765/2008.
RoHS	RoHS	SCHURTER AG	Directive RoHS 2011/65/EU, Amendment (EU) 2015/863
China RoHS	China RoHS	SCHURTER AG	The law SJ / T 11363-2006 (China RoHS) has been in force since 1 March 2007. It is similar to the EU directive RoHS.
REACH	REACH	SCHURTER AG	On 1 June 2007, Regulation (EC) No 1907/2006 on the Registration, Evaluation, Authorization and Restriction of Chemicals 1 (abbreviated as "REACH") entered into force.

Dimension [mm]

Case 1U

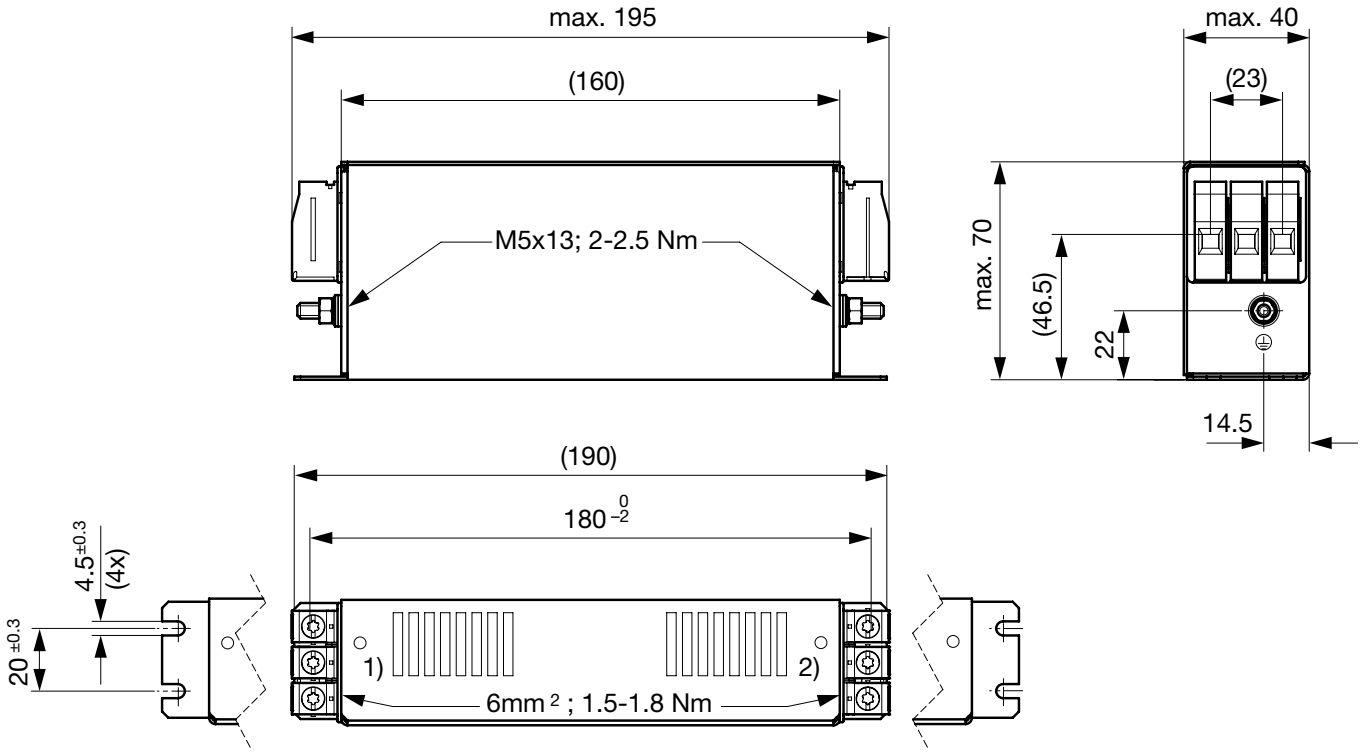

1) Line
2) Load

Case 1C

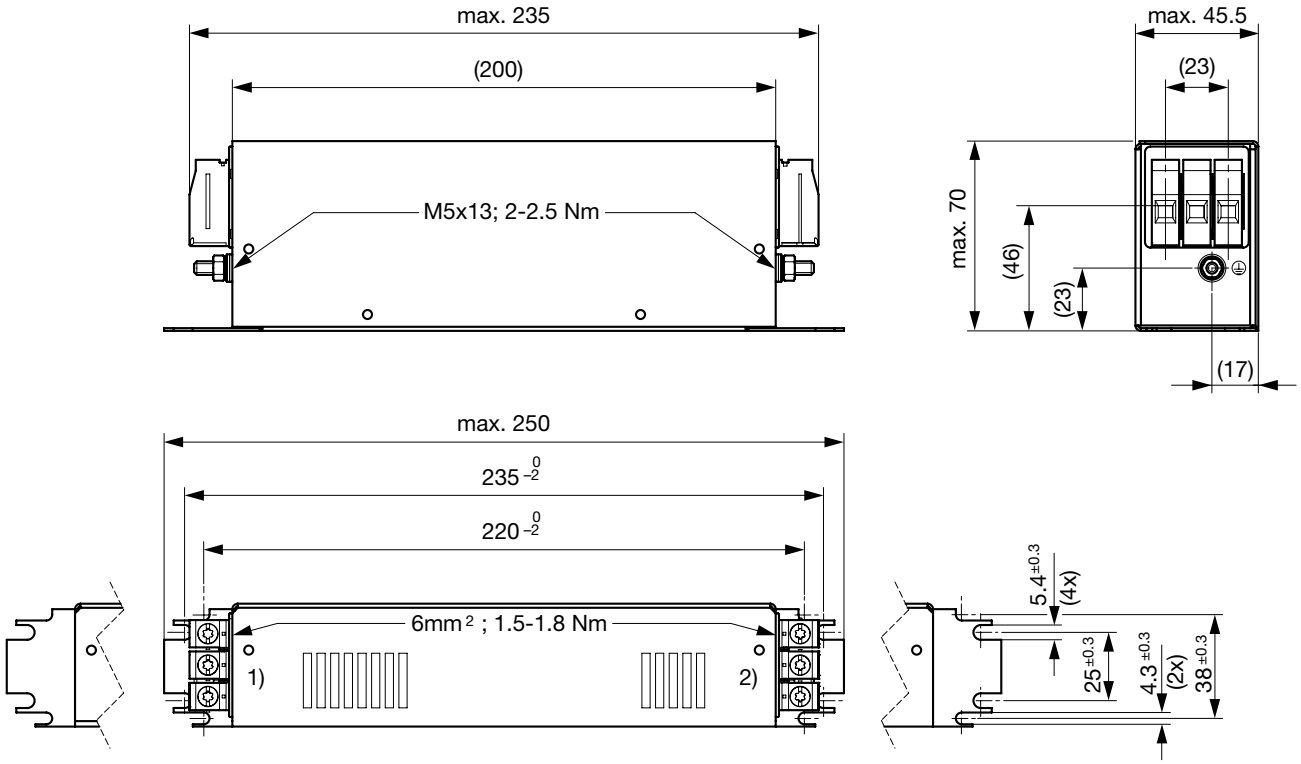

1) Line
2) Load

Case 1Q

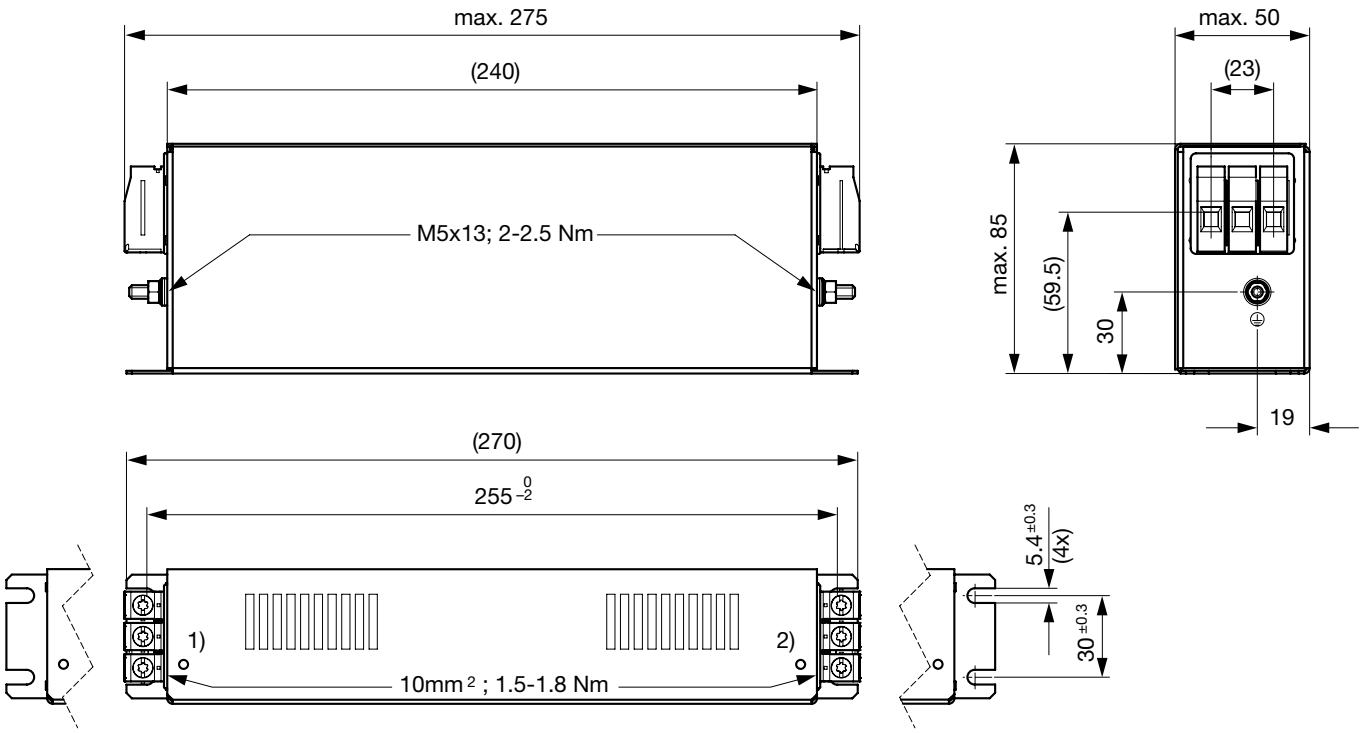

1) Line
2) Load

Case 1R

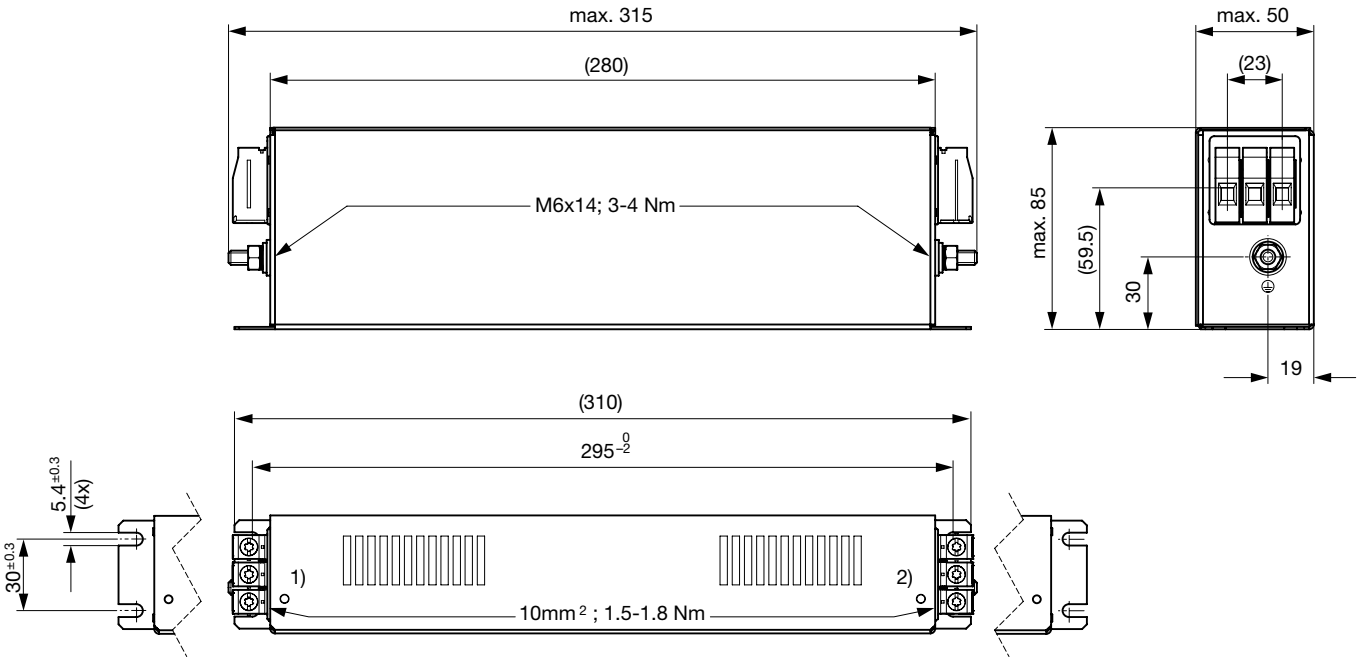

1) Line
2) Load

Case 1S

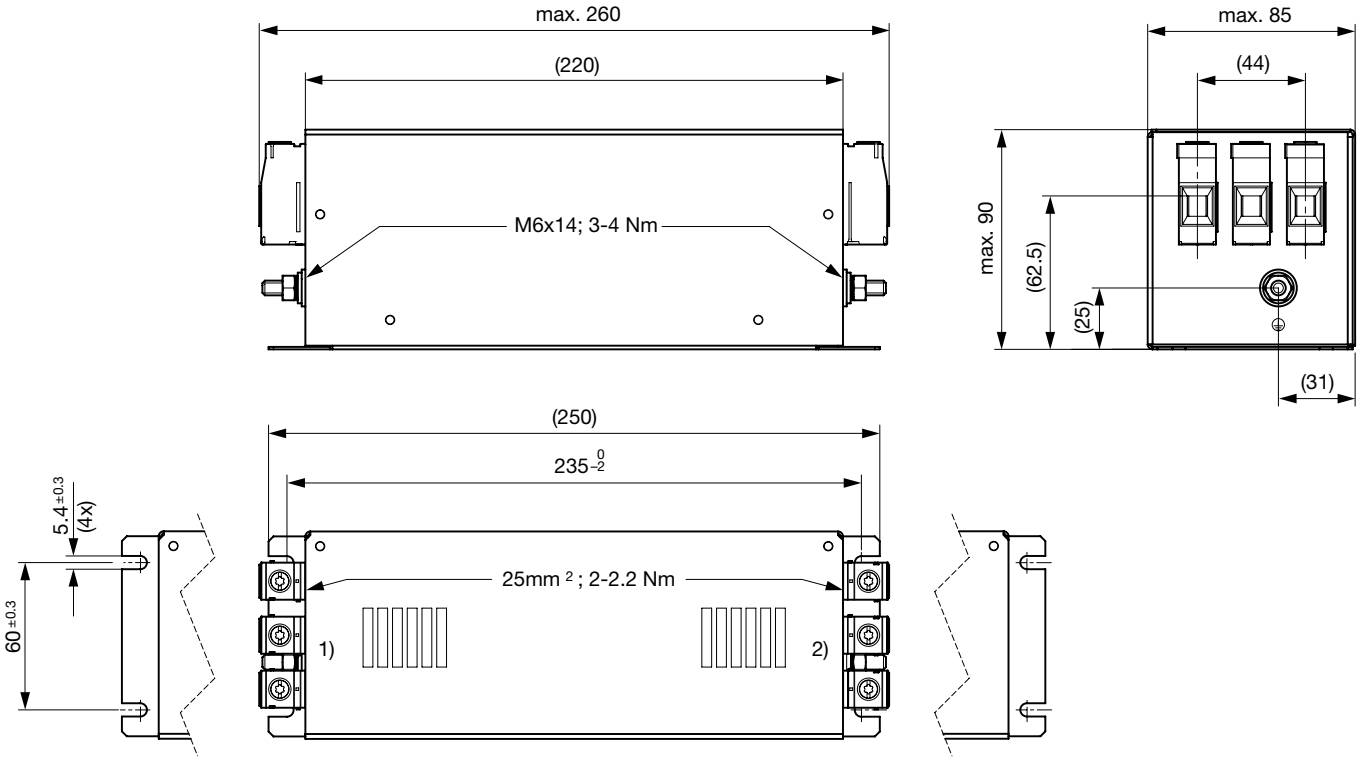

1) Line
2) Load

Case 1F

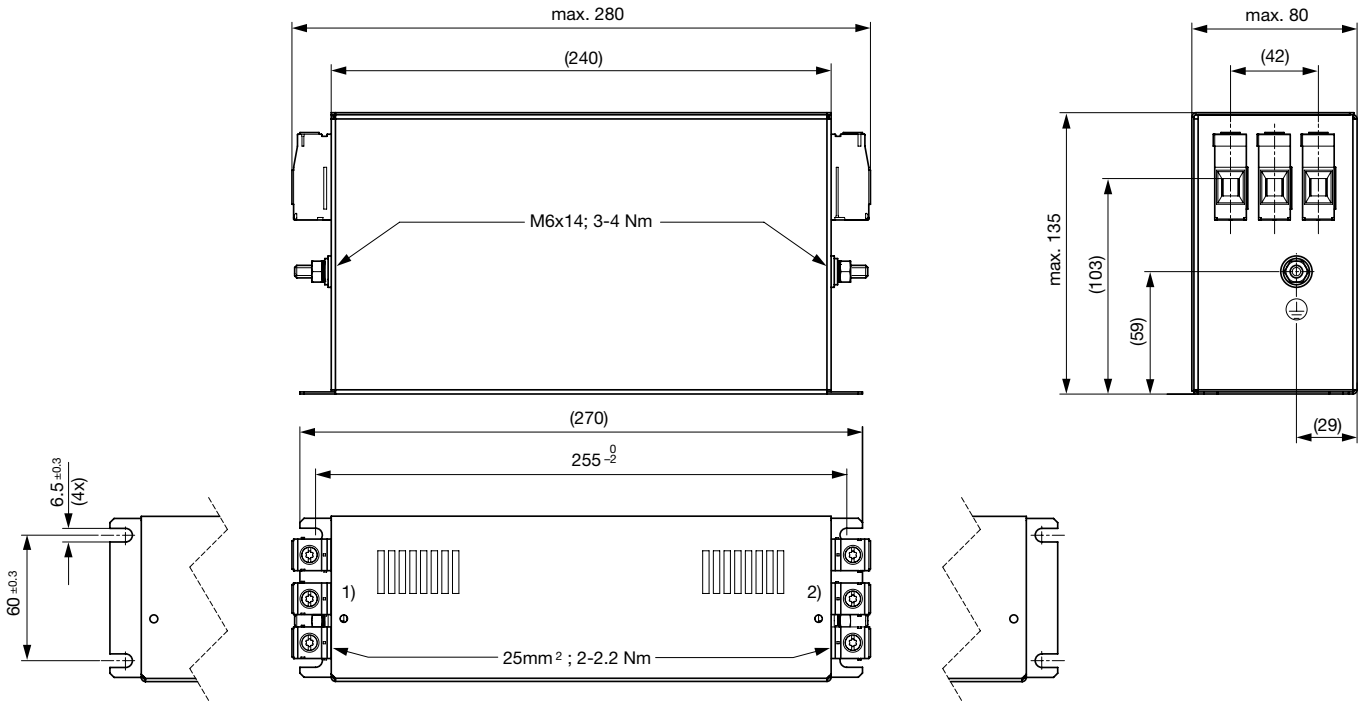

1) Line
2) Load

Case 1G

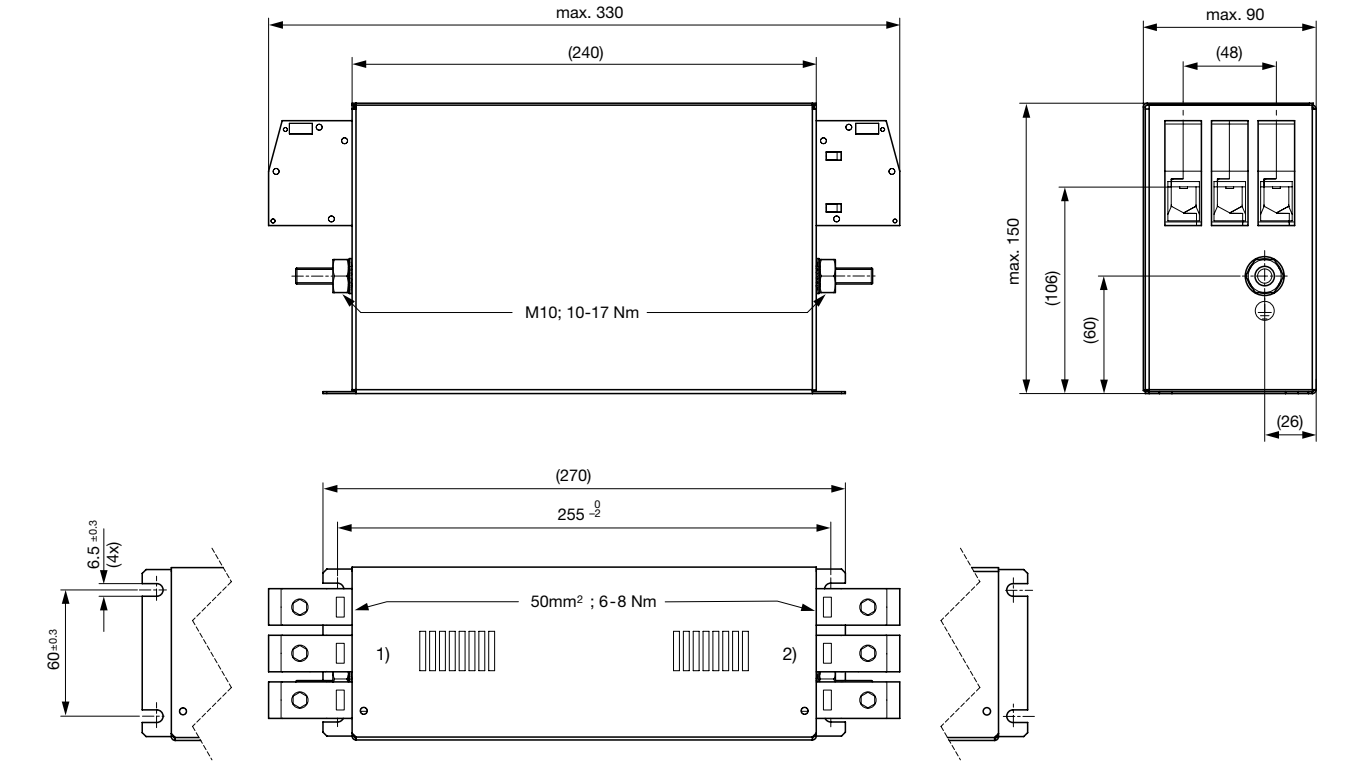

1) Line
2) Load

Case 1V

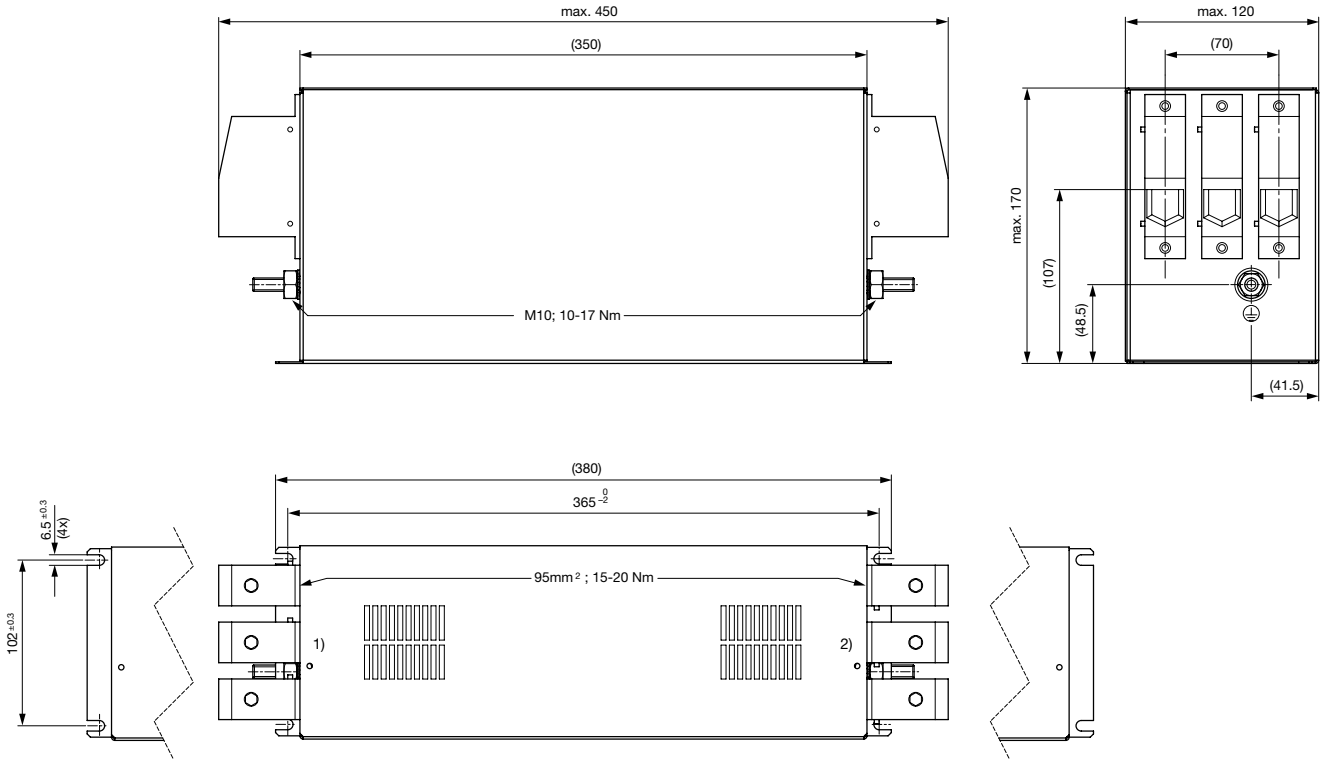

1) Line
2) Load

Diagrams

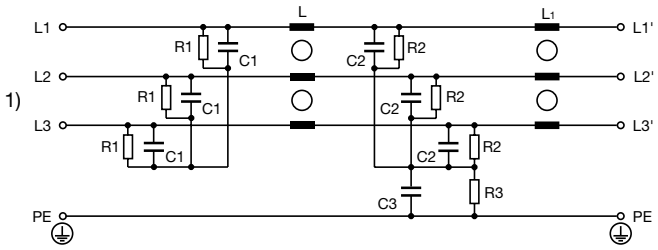

1) Line

Derating Curves

Permissible Working Current as a Function of Ambient Temperature

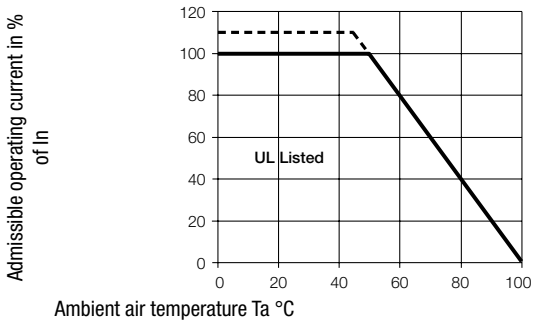

Attenuation Loss . . . . 0.1/100Ω differential mode ..... 100/0.1Ω differential mode - - - - 50Ω differential mode _____ 50Ω common mode

Industrial version

7A

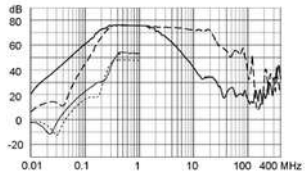

16A

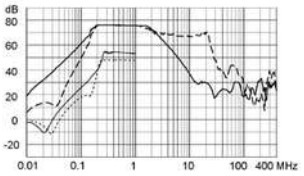

30A

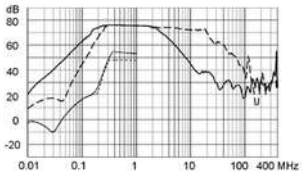

42A

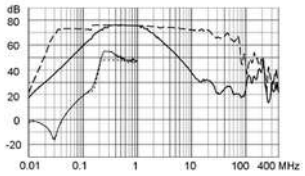

55A

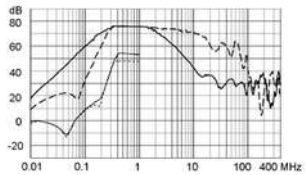

75A

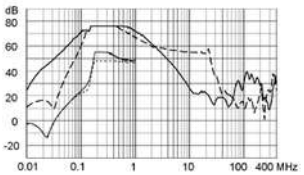

100A

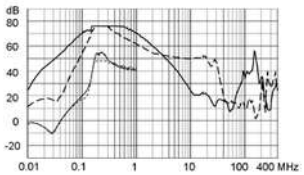

130A

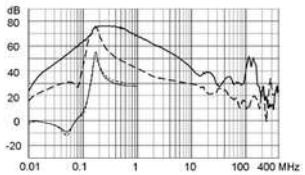

180A

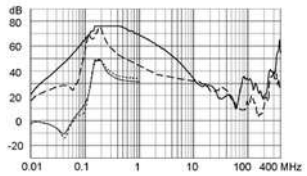

All Variants

Rated Current @ Ta 50°C (40°C) [A]	Rated Voltage [VAC]	Powerloss @ 25°C, 50Hz [W]	Leakage Current @ 400VAC, 50Hz	Weight [kg]	Screw clamps [mm2] 2)	Housing	Packaging unit	Order Number	
7 (7.7)	520	1.5	4.3	0.75 kg	6	1U	3	FMBC-R91U-0712	▮
16 (17.5)	520	5.4	4.3	1.2 kg	6	1C	3	FMBC-R91C-1612	
30 (32.9)	520	6.6	4.3	1.8 kg	10	1Q	4	FMBC-R91Q-3012	
42 (46)	520	10.7	4.3	1.8 kg	10	1R	3	FMBC-R91R-4212	▮
55 (60.2)	520	13.3	4.3	2.4 kg	25	1S	2	FMBC-R91S-5512	
75 (82.2)	520	19.6	17.5	4.1 kg	25	1F	1	FMBC-R91F-7512	▮
100 (109.5)	520	26.3	17.5	5.4 kg	50	1G	1	FMBC-R91G-J012	
130 (142.4)	520	10	19.3	4.6 kg	50	1G	1	FMBC-R91G-J312	▮
180 (197.1)	520	31	19.3	9.4 kg	95	1V	1	FMBC-R91V-J812	▮

▮ Most Popular.

Availability for all products can be searched real-time:https://www.schurter.com/en/Stock-Check/Stock-Check-SCHURTER

1) Leakage current according IEC 60939-1

2) Maximum conductor cross section (wire gauge) to be used; a comparative table for AWG and mm² values can be found in the general product information https://www.schurter.com/en/FAQ#10

09.12.2021

The specifications, descriptions and illustrations indicated in this document are based on current information. All content is subject to modifications and amendments. Information furnished is believed to be accurate and reliable. However, users should independently evaluate the suitability and test each product selected for their own applications.