E30419

Damping screw for pressure sensors

DAMPING SCREW 0,30 PN NEXT

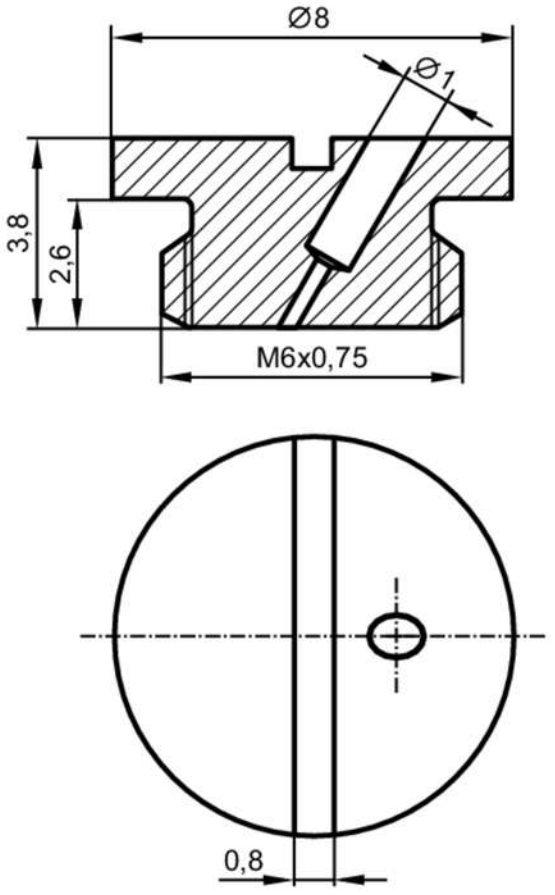

Mechanical data		
Weight	[g]	3.7
Materials		stainless steel (1.4404 / 316L)

Remarks	
Pack quantity	1 pcs.