Mini free-standing Beacons / Permanent Light 200

Permanent Beacon BM 12-230VAC/DC RD



Part No.: 200.100.00

MECHANICAL DATA	
Height	66 mm
Diameter	57 mm
Materials	PA-GF PC
Dome colour	Red
Housing colour	Black
Protection category	IP65
Connection	Spring-type terminal
cross-sectional area maximum	2,50mm² / 14AWG
Cable entry	Through hole
Cable entry maximum	d = 10 mm
Type of fixing	Base mounting
Working temperature minimum	-20°C
Working temperature maximum	+50°C
Weight with packaging	69 g
Product weight	47 g

ELECTRICAL DATA	
Operating voltage	12-230V
Operating voltage type	AC/DC
Protection class	Protection class 2
Pollution degree	3
Overvoltage category	II
Isolation voltage	Ui = 250V; Uimp = 2.500V

OPTICAL DATA	
Light source	Filament lamp
Light colour	Red
Optical signal image	Permanent
Service life optical	depends on bulb
Lamp fitting/socket	B15d

APPROVAL DATA	
Conforms with CE	Yes
WEEE	Yes
Conforms with ATEX-directive	No
Conforms with CCC	Yes
Conforms with UL	cULus
UL Type Rating	Type 12

! For additional installation and mounting information, refer to the appropriate user guide at www.werma.com. This printed copy is for information only and is subject to alteration.

Mini free-standing Beacons / Permanent Light 200

Permanent Beacon BM 12-230VAC/DC RD

EAC certificate available	Yes
ICAO Certification	No
Conforms with RoHS CN	No

DRAWING

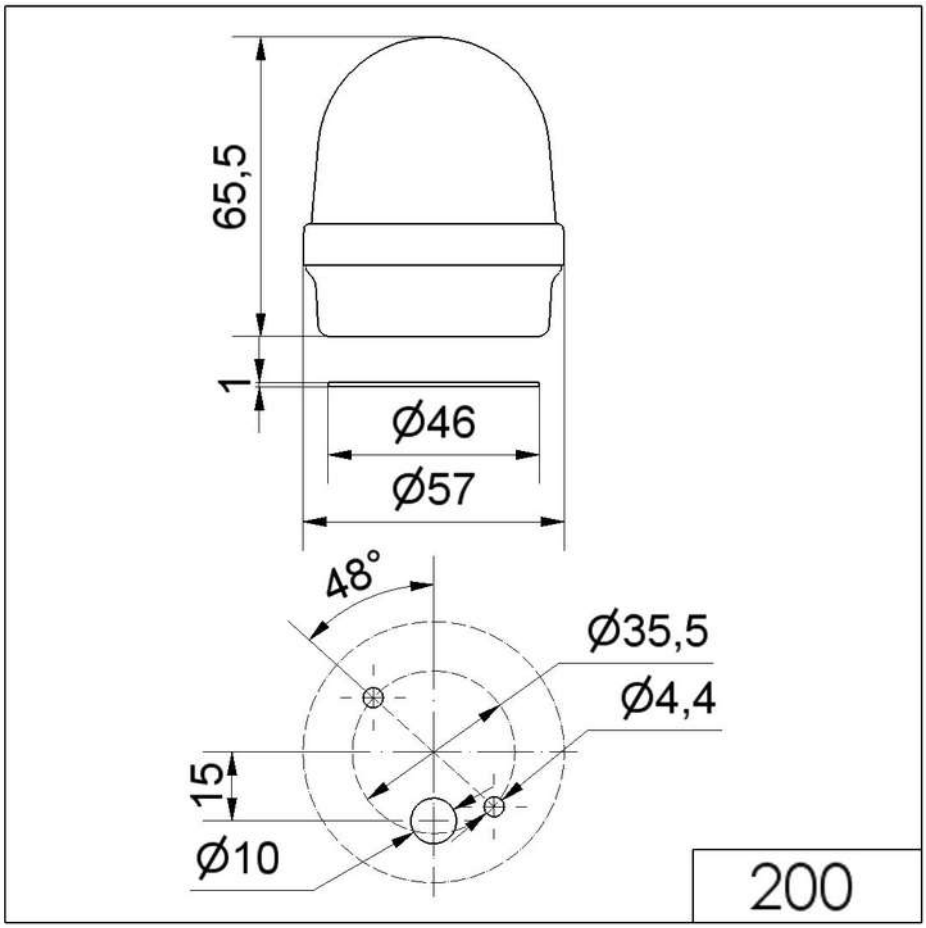

! For additional installation and mounting information, refer to the appropriate user guide at www.werma.com. This printed copy is for information only and is subject to alteration.