E10822

Jumper cable with valve plug

VVDAA040--N00,6E02STAH020VAN

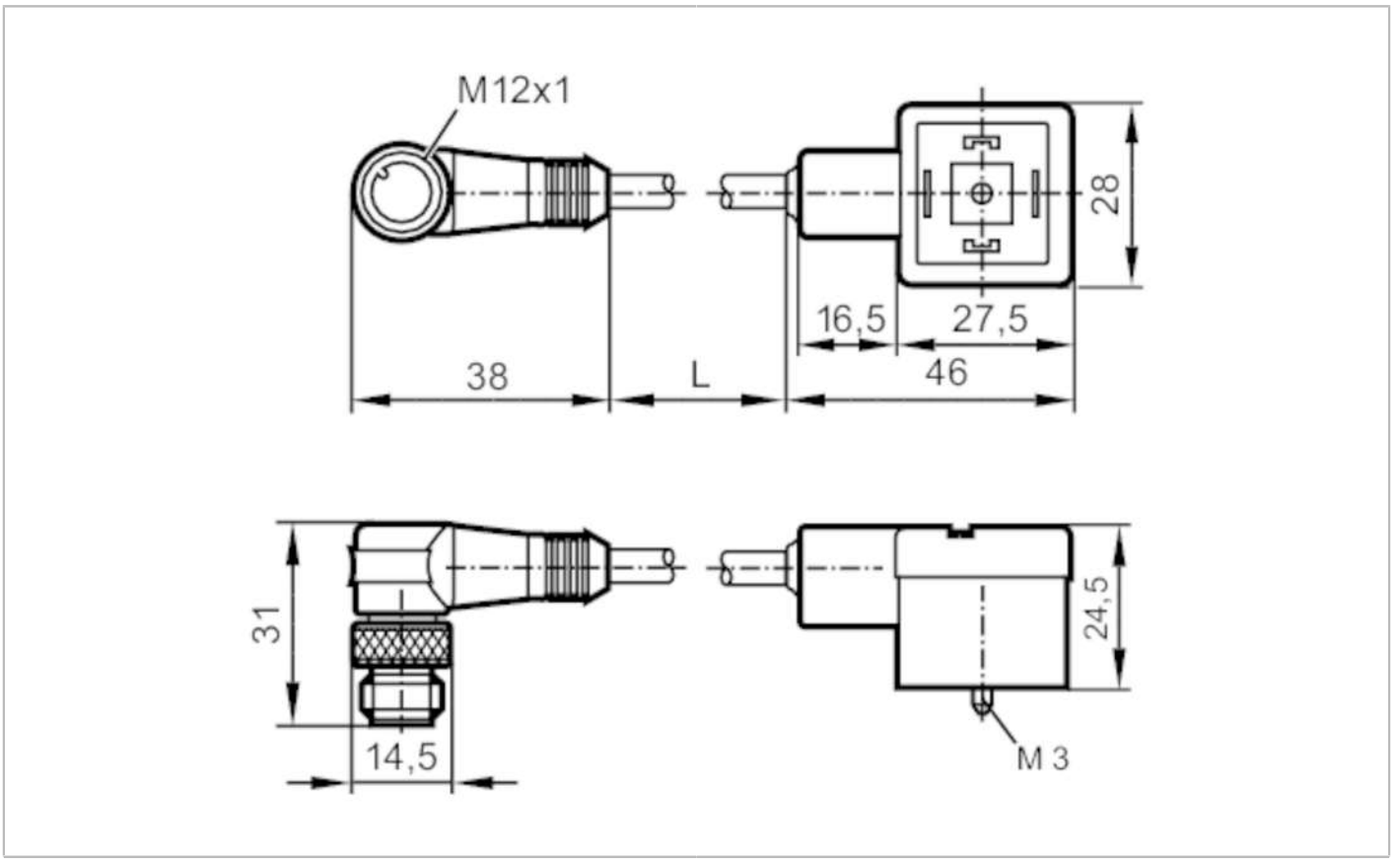

Application		
Application		NAMUR
Electrical data		
Operating voltage	[V]	< 15 DC
Operating conditions		
Ambient temperature	[°C]	-25...90
Protection		IP 67
Mechanical data		
Weight	[g]	62.2
Dimensions	[mm]	31 x 14.5 x 38
Materials		TPU; PUR
Moulded-body material		TPU / PUR
Material nut		stainless steel (1.4404 / 316L)
Accessories		
Items supplied		screw panel for labelling
Remarks		
Remarks		For use in zone 0, group IIB or IIC the user has to avoid intensive electrostatic charge build-up at the sockets.
Pack quantity		1 pcs.

E10822

Jumper cable with valve plug

VVDAA040--N00,6E02STAH020VAN

Electrical connection - plug

Connector: 1 x M12, angled; coding: A; Moulded body: TPU / PUR; Locking: stainless steel (1.4404 / 316L)

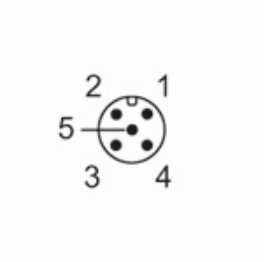

Electrical connection

Cable: 0.6 m, PVC, blue, Ø 5.1 mm; 2 x 0.5 mm²

Connection

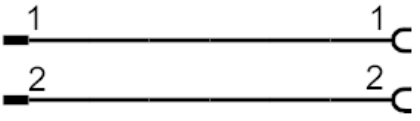

Electrical connection - socket

Connector: 1 x valve type A DIN, angled; Moulded body: TPU / PUR; Locking: stainless steel (1.4404 / 316L)

