IQ2009

Inductive sensor with IO-Link

IQ23007BFRKG/IO/0.3M/PUR/US

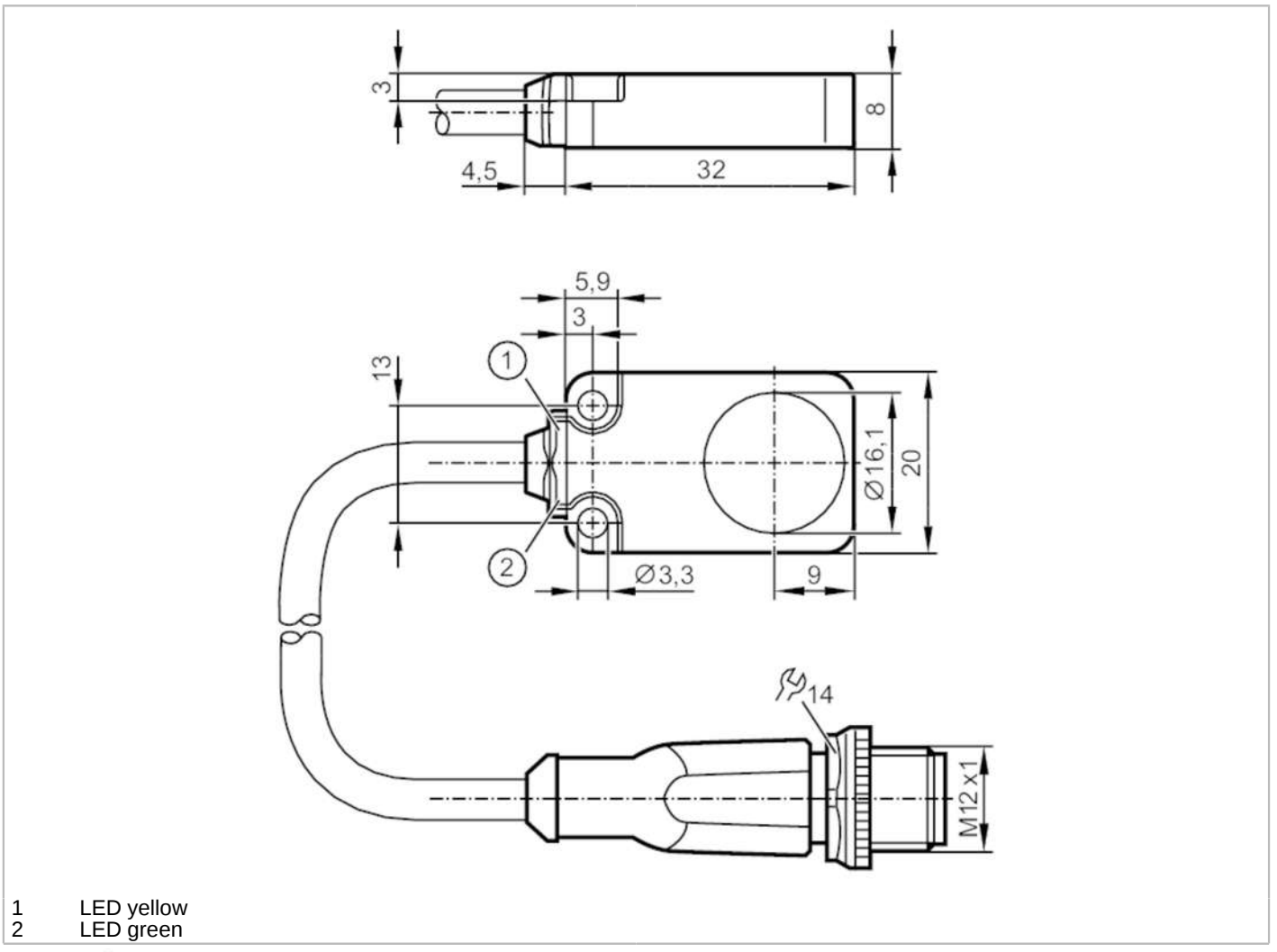

1 LED yellow
2 LED green

Product characteristics		
Electrical design		PNP/NPN; (parameterisable)
Output function		normally open / normally closed; (parameterisable)
Communication interface		IO-Link
Housing		rectangular
Dimensions	[mm]	20 x 8 x 32
Electrical data		
Operating voltage	[V]	10...30 DC
Current consumption	[mA]	< 30
Protection class		III
Reverse polarity protection		yes
Outputs		
Electrical design		PNP/NPN; (parameterisable)
Output function		normally open / normally closed; (parameterisable)
Max. voltage drop switching output DC	[V]	2.5

IQ2009

Inductive sensor with IO-Link

IQ23007BFRKG/IO/0.3M/PUR/US

Permanent current rating of switching output DC	[mA]	100	
Switching frequency DC	[Hz]	300	
Short-circuit protection		yes	
Overload protection		yes	
Detection zone			
Switch point IO-Link	[mm]	1.4...7; (parameterisable)	
Measuring range IO-Link	[mm]	0.75...7.5	
Accuracy / deviations			
Correction factor		steel: 1 / stainless steel: 0.7 / brass: 0.5 / aluminium: 0.4 / copper: 0.3	
Hysteresis	[% of Sr]	3...15	
Note on hysteresis		parameterisable	
Linearity error IO-Link	[%]	± 2; (of the final value of the measuring range)	
Repeatability IO-Link	[%]	± 1; (of the final value of the measuring range)	
Temperature coefficient	[%/K vom MEW]	± 0,6; (-25...70 °C: ± 0,3)	
Temperature drift		± 10 %; (of the final value of the measuring range)	
Interfaces			
Communication interface		IO-Link	
Transmission type		COM2 (38,4 kBaud)	
IO-Link revision		1.1	
SDCI standard		IEC 61131-9 CDV	
Profiles		Smart Sensor: Identification and diagnosis; Multi-channel, two setpoint switching sensor, type 0 Generic Profiled Sensor; Teach Channel	
SIO mode		yes	
Required master port type		A	
Min. process cycle time	[ms]	3.2	
IO-Link process data (cyclical)		function	bit length
		process value	16
		device status	4
		binary switching information	2
IO-Link functions (acyclical)		application specific tag; operating hours counter	
Supported DeviceIDs		Type of operation	DeviceID
		Default	1106
Note		For further information please see the IODD PDF file under "Downloads"	
Operating conditions			
Ambient temperature	[°C]	-40...85	
Protection		IP 65; IP 66; IP 67; IP 68	
Tests / approvals			
EMC		EN 61000-4-2 ESD	4 kV CD / 8 kV AD
		EN 61000-4-3 HF radiated	10 V/m
		EN 61000-4-4 Burst	2 kV
		EN 61000-4-6 HF conducted	10 V
		EN 55011	class B
Vibration resistance		EN 60068-2-6 Fc	20 g (10...3000 Hz) / 50 sweep cycles, 1 octave per minute, in 3 axes

IQ2009

Inductive sensor with IO-Link

IQ23007BFRKG/IO/0.3M/PUR/US

Shock resistance		EN 60068-2-27 Ea	100 g 11 ms half-sine; 3 shocks each in every direction of the 3 coordinate axes
Continuous shock resistance		EN 60068-2-27	40 g 6 ms; 4000 shocks each in every direction of the 3 coordinate axes
Fast temperature change		EN 60068-2-14 Na	TA = -40°C; TB = 85°C; t1 = 30 min; t2 = < 10 s 50 cycles
MTTF	[years]	787	
Embedded software included		yes	
UL approval		Ta	-25...70 °C
		Enclosure type	Type 1
		power supply	Limited Voltage/Current
		UL Approval no.	A016
		File number UL	E174191

Mechanical data

Weight	[g]	42.7
Housing		rectangular
Mounting		flush mountable
Dimensions	[mm]	20 x 8 x 32
Materials		diecast zinc special coating; sensing face: PBT orange; LED window: TPU; potting: PUR

Displays / operating elements

Display	Display operation	1 x LED, green
	switching status	1 x LED, yellow

Remarks

Pack quantity	1 pcs.

Electrical connection

Cable: 0.3 m, PUR, Ø 4.9 mm; 3 x 0.34 mm²

Connection

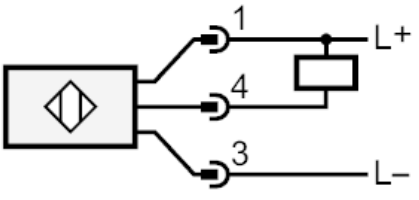

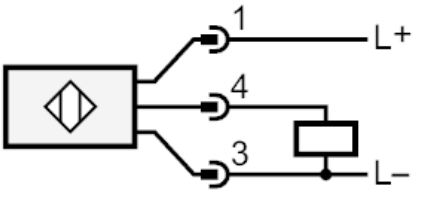

4	OUT / IO-Link

IQ2009

Inductive sensor with IO-Link

IQ23007BFRKG/IO/0.3M/PUR/US

Connector: 1 x M12; coding: A

