182.72.104.66UCFLGehäuseeinheiten

Housing units UCFL206 (Series UCFL)

two-bolt flanged housing units, cast iron, grub screws in inner ring, RSR seals

The datasheet is only an overview of dimensions and basic load ratings of the selected product. Please always observe all the guidelines in these overview pages. Further information is given on many products under the menu item "Description". You can also order comprehensive information via the Catalogue selection system (https://www.schaeffler.de/content.schaeffler.de/en/news_media/index.jsp) or by telephone on +49 (91 32) 82 - 28 97.

d	30	mm	
H	148	mm	
U	40,2	mm	
A	31	mm	
A_1	14	mm	
A_2	18	mm	
B	38,1	mm	
J	117	mm	
L	80	mm	
N	16	mm	
m	0,88	kg	Mass
	FL206		Designation, housing
	UC206		Designation, radial insert ball bearing

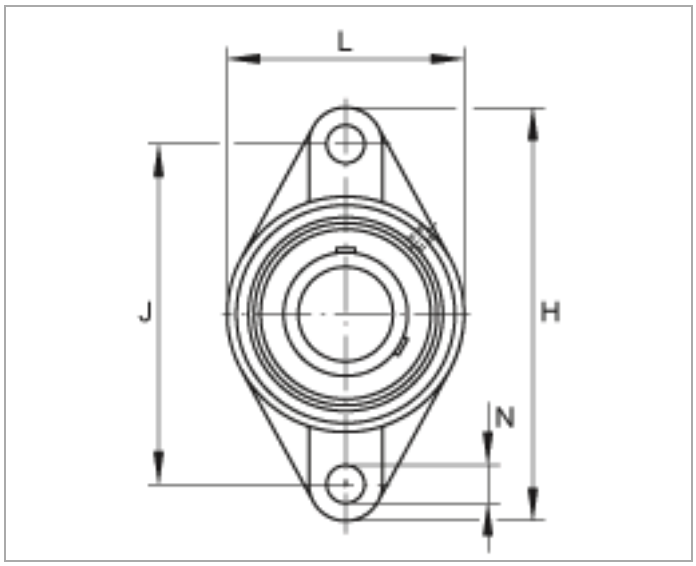
L
J
H
N

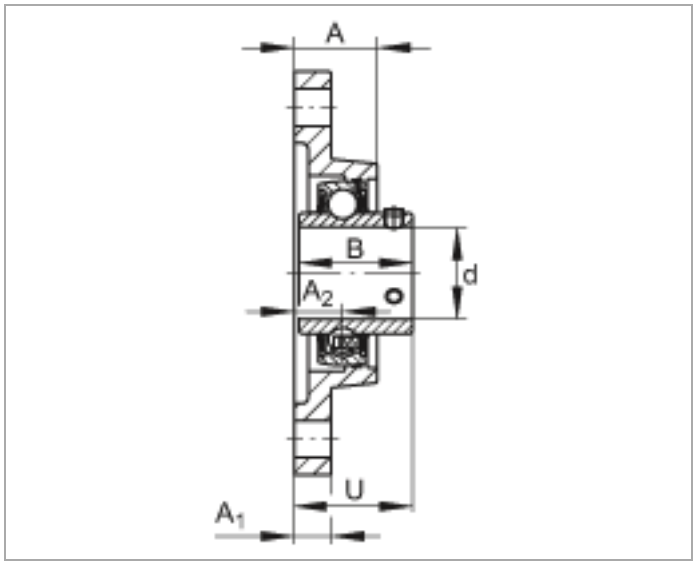
A
B
d
A2
U
A1