A100SONTEL Telephone Initiated Alarm Sounder

The A100SONTEL is a compact, high output, 100dB(A) telephone initiated alarm sounder.

The line powered A100SONTEL has a choice of three alarm tone frequencies.

Features

- Continuously rated
- Stainless steel fixings
- Unit can be mounted using external lugs or internal fixing positions
- Dual M20 clearance cable entries

Approvals

- CE
- UKCA
- EAC: CU TR 04/2011 CU TR 20/2011
- Russian Maritime Register of Shipping





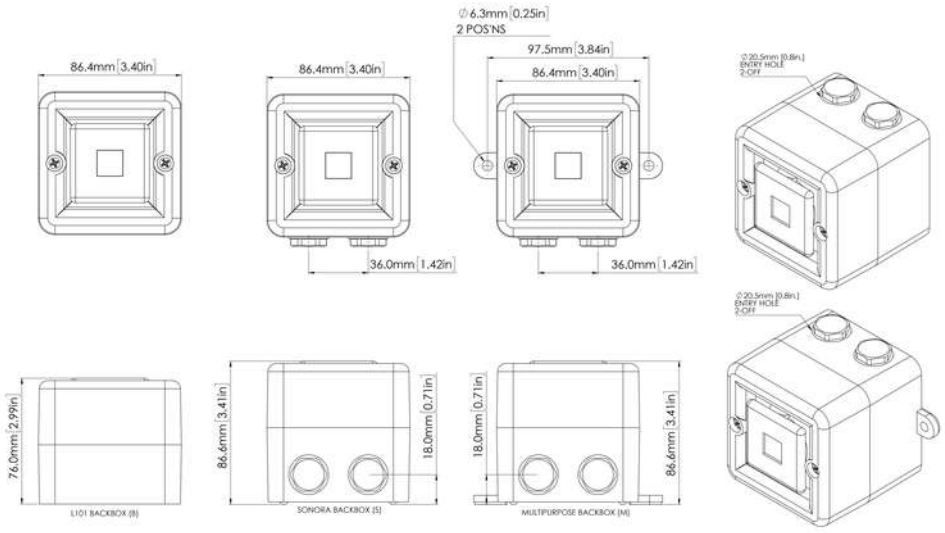

Specification

Nominal output:	100dB(A) @ 1m +/- 3dB [91dB(A) @ 10ft/3m]
No. of tones:	3
Volume control:	Max. 100dB(A); Min. 90dB(A)
Effective range:	32m/105ft @ 1KHz
Supply:	Direct power from telephone line (REN 1)
Ingress protection:	IP66
Enclosure material:	High impact UL94 V0 & 5VA FR ABS
Colour:	Red (RAL3000), grey (RAL7038) & white.
Cable entries:	3 x M20 clearance gland knockouts in side & back
Terminals:	0.5 to 2.5mm² cables.
Operating temp:	-40 to +66°C [-40° to +151°F]
Storage temp:	-40 to +70°C [-40° to +158°F]
Relative humidity:	90% at 20°C [68°F]
Weight:	0.26kg/0.57lbs

*SPL data +/-3dB(A). Measured at optimum voltage.

Part Codes

Variable:	Identifier:	Description:
Product type:	A100SONTEL	Telephone Initiated Alarm Horn Sounder
Back box/cable entries: [e]	B	Back box without mounting lugs – 1 x rear 20mm entry
	M	Back box with mounting lugs – 2 x M20 clearance
	S	Back box without mounting lugs – 2 x M20 clearance
Stopping plug material: [m]	A	ABS
	X	No stopping plug – B type back box only
Equip. tag/Duty label: [s]	0	No equip. tag or Duty label
	1	316 (A4) St/St Equip. tag/Duty label
	2	Metalised Polyester Equip. tag/Duty label
Product version: [v]	A	RMRS, EAC, CE, UKCA
Product option: [o]	1	Standard product
	X	Custom configuration – contact E2S
	T	Conformal coated – tropicalised
Enclosure: [x]	R	Red (RAL 3000)
	G	Grey (RAL7038)
	W	White

No liability is accepted for any consequence of the use of this document. The technical specification of this unit is subject to change without notice due to our policy of continual product development. All dimensions are approximate. This unit is sold subject to our standard conditions of sale, a copy of which is available on request.