TABLE 1

MOLEX P/N	ENG. NO.	CABLE LENGTH (mm)	LED
1202510091	BKB817P-FBW-003	300	YES
1202510092	BKB817N-FBW-003	300	YES

TABLE 2 BILL OF MATERIAL

ITEM	DESCRIPTION	MATERIAL	FINISH
1	LABEL	ABS	WHITE
2	CABLE PLATE	PBT	BLACK
3	CABLE	TPU BASED	BLACK
4	CONTACT	BRONZE	GOLD OVER NICKEL
5	O-RING	FPM	RED
6	LED	NON LED = PA	BLACK
		WITH LED = PA	TRANSPARENT
7	SHELL	BRASS	NICKEL PLATED
8	HOUSING	PBT	BLACK
9	OVERMOLD	PUR	BLACK
10	O-RING	NBR	BLACK
11	SHELL	BRASS	NICKEL PLATED
12	CONTACT	BRONZE	GOLD OVER NICKEL
13	O-RING	NBR	BLACK

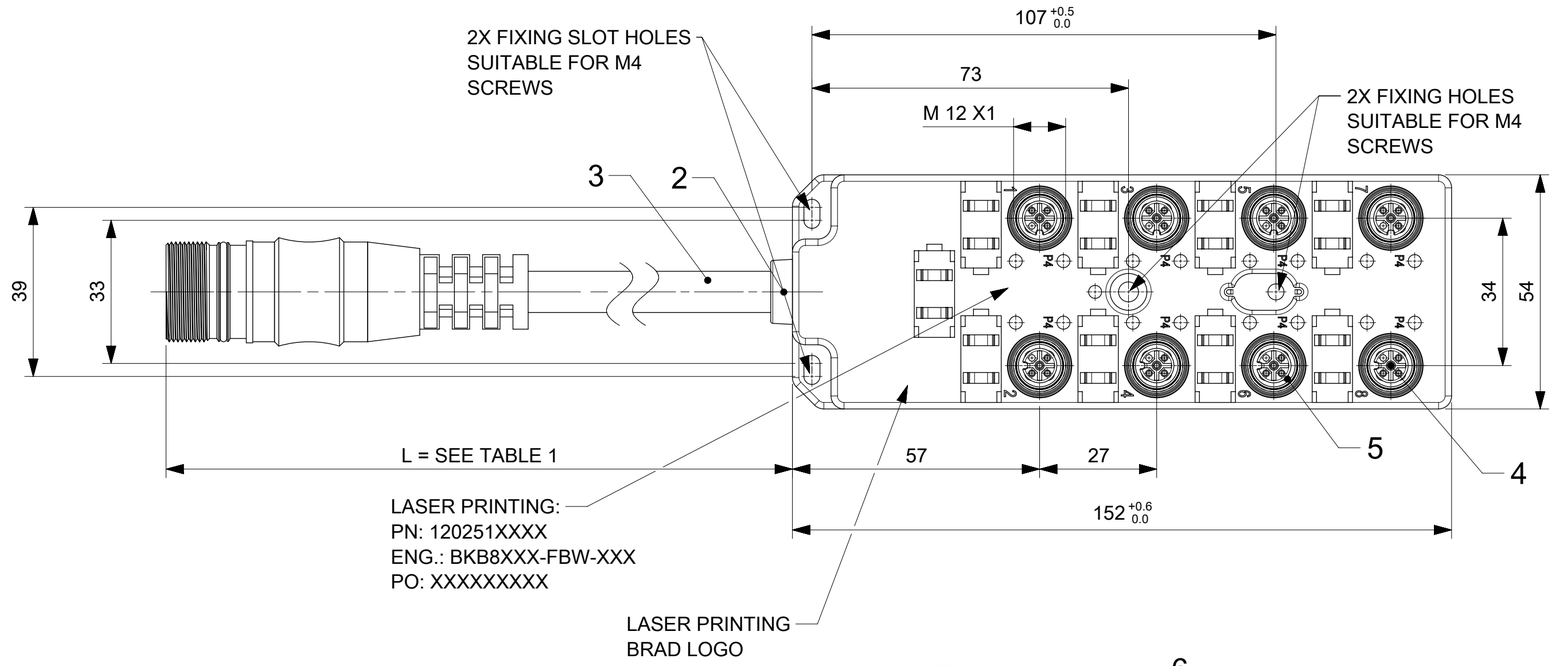

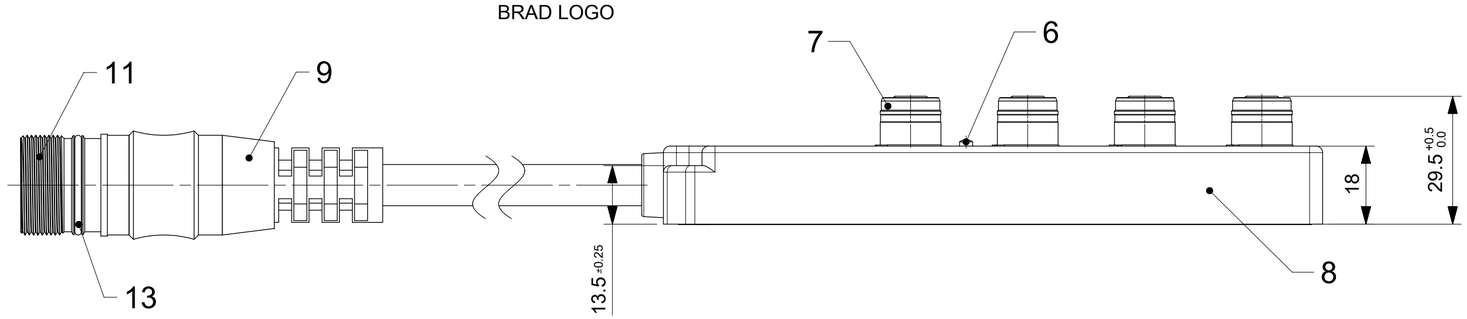

M23 12PIN
FRONT VIEW

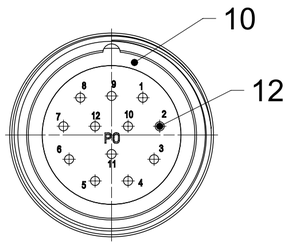

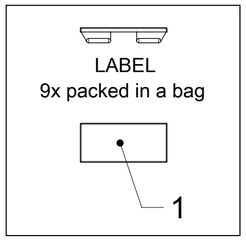

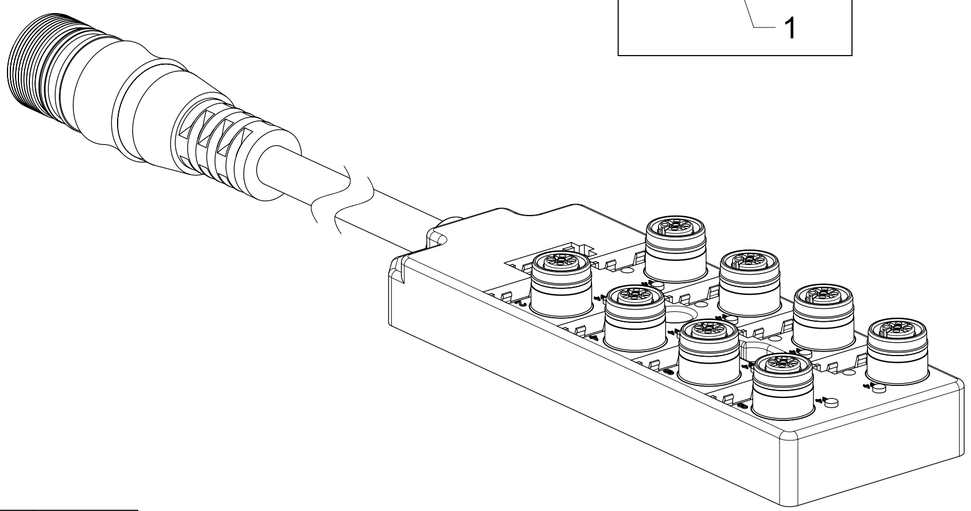

PIN	COLOR
1	WHITE
2	GREEN
3	YELLOW
4	GREY
5	PINK
6	RED
7	BLACK
8	VIOLET
9	BLUE
10	-
11	BROWN
12	YELLOW/GREEN

GENERAL CHARACTERISTICS:

ELECTRICAL AND MECHANICAL DATA ACC. TO IEC 61076-2-101

NOMINAL VOLTAGE:	10-30 V DC
AMPERE RATING:	4 A PER PORT / 12 A MAX
AMPERE RATING WITH UL REGISTRATION:	3 A PER PORT / 9 A MAX
IP DEGREE OF PROTECTION:	IP 67
TEMPERATURE RANGE:	-25°C to + 85°C

THIS DRAWING CONTAINS INFORMATION THAT IS PROPRIETARY TO MOLEX ELECTRONIC TECHNOLOGIES, LLC AND SHOULD NOT BE USED WITHOUT WRITTEN PERMISSION

DIMENSION UNITS	SCALE
mm	1:1

GENERAL TOLERANCES (UNLESS SPECIFIED)

ANGULAR TOL	±	1.0 °
4 PLACES	±	
3 PLACES	±	
2 PLACES	±	0.05
1 PLACE	±	0.3
0 PLACES	±	0.5

DRAFT WHERE APPLICABLE MUST REMAIN WITHIN DIMENSIONS

CURRENT REV DESC: INITIAL RELEASE

EC NO: 631635

DRWN:	MDHARMANTI	2020/01/28
CHK'D:	RSILLER	2020/02/05
APPR:	RSILLER	2020/02/05

INITIAL REVISION:

DRWN:	SSM	2019/01/04
APPR:	RSILLER	2020/01/17

THIRD ANGLE PROJECTION | DRAWING: A2-SIZE | SERIES: 120251

molex

MPIS U12 PNP 4P 8PT 0.3M M23 12P BK

PRODUCT CUSTOMER DRAWING

DOCUMENT NUMBER	DOC TYPE	DOC PART	REVISION
1202510091	PSD	000	A1

MATERIAL NUMBER	CUSTOMER	SHEET NUMBER
SEE TABLE 1	GENERAL MARKET	1 OF 2

DOCUMENT STATUS	P1	RELEASE DATE	2020/02/05 10:52:03

FORMAT: master-tb-prod-A2
REVISION: H
DATE: 2018/01/18

Wiring Diagram PNP Single

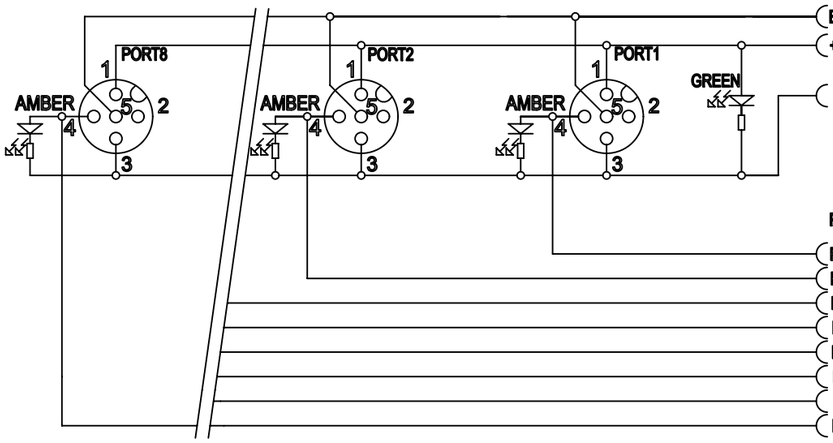

FUNCTION	WIRE COLOR	PIN NO.
EARTH	GREEN/YELLOW	12
+V	BROWN	11
-V	BLUE	9

PORT (CONTACT)	WIRE COLOR	
PORT 1(4)	WHITE	1
PORT 2(4)	GREEN	2
PORT 3(4)	YELLOW	3
PORT 4(4)	GREY	4
PORT 5(4)	PINK	5
PORT 6(4)	RED	6
PORT 7(4)	BLACK	7
PORT 8(4)	VIOLET	8

Wiring Diagram NPN Single

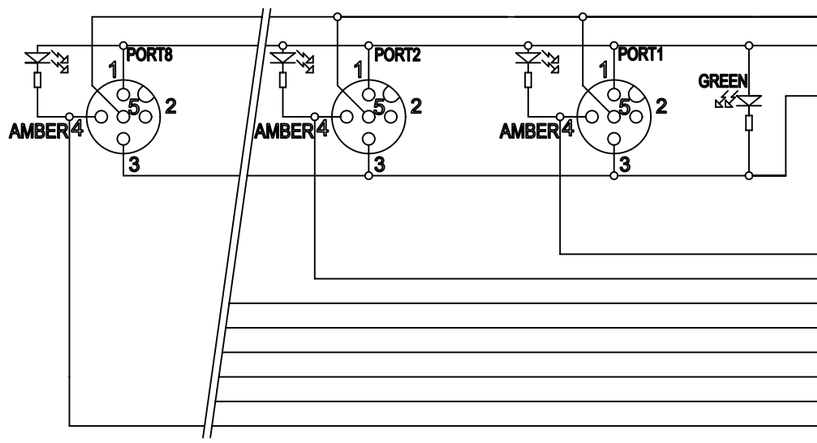

FUNCTION	WIRE COLOR	PIN NO.
EARTH	GREEN/YELLOW	12
+V	BROWN	11
-V	BLUE	9

PORT (CONTACT)	WIRE COLOR	
PORT 1(4)	WHITE	1
PORT 2(4)	GREEN	2
PORT 3(4)	YELLOW	3
PORT 4(4)	GREY	4
PORT 5(4)	PINK	5
PORT 6(4)	RED	6
PORT 7(4)	BLACK	7
PORT 8(4)	VIOLET	8

CABLE LENGTH TOLERANCES

LENGTH [m]	TOLERANCE [mm]
0-1	+40
>1-5	+60
>5-10	+80
>10-20	+140
>20-30	+160
>30	+1% length

THIS DRAWING CONTAINS INFORMATION THAT IS PROPRIETARY TO MOLEX ELECTRONIC TECHNOLOGIES, LLC AND SHOULD NOT BE USED WITHOUT WRITTEN PERMISSION

DIMENSION UNITS	SCALE
mm	1:1

GENERAL TOLERANCES (UNLESS SPECIFIED)

ANGULAR TOL	± 1.0 °
4 PLACES	±
3 PLACES	±
2 PLACES	± 0.05
1 PLACE	± 0.3
0 PLACES	± 0.5

DRAFT WHERE APPLICABLE MUST REMAIN WITHIN DIMENSIONS

CURRENT REV DESC: INITIAL RELEASE

EC NO: 631635
DRWN: MDHARMANTI 2020/01/28
CHK'D: RSILLER 2020/02/05
APPR: RSILLER 2020/02/05

INITIAL REVISION:
DRWN: SSM 2019/01/04
APPR: RSILLER 2020/01/17

THIRD ANGLE PROJECTION | DRAWING: A3-SIZE | SERIES: 120251

molex

MPIS U12 PNP 4P 8PT 0.3M M23 12P BK

PRODUCT CUSTOMER DRAWING

DOCUMENT NUMBER	DOC TYPE	DOC PART	REVISION
1202510091	PSD	000	A1

MATERIAL NUMBER	CUSTOMER	SHEET NUMBER
SEE TABLE 1	GENERAL MARKET	2 OF 2

DOCUMENT STATUS	P1	RELEASE DATE	2020/02/05 10:52:03

FORMAT: master-tb-prod-A3
REVISION: H
DATE: 2018/01/18