E20128

Fibre optic through-beam sensor

FE-00-A-A-M4

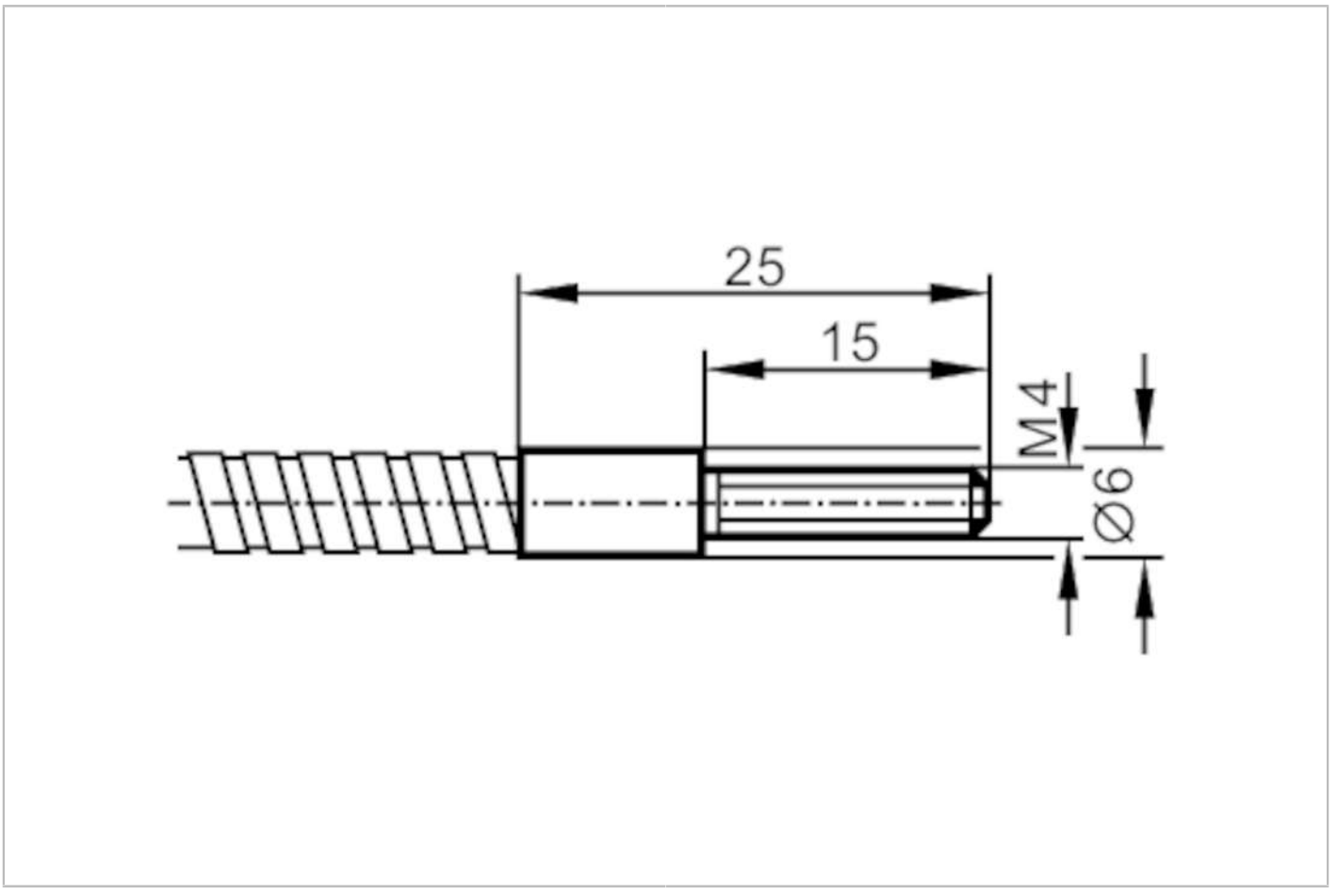

Application		
Function principle		Through-beam sensor
Application		High temperature resistance; Robust design for use in harsh industrial environments
Detection zone		
Range with fibre-optic amplifier type		OCF; OKF; OOF; OUF
OCF (High Power)		
Range of fibre optics	[mm]	1200
OKF		
Range of fibre optics	[mm]	120
OOF		
Range of fibre optics	[mm]	400
OUF		
Range of fibre optics	[mm]	120
Operating conditions		
Ambient temperature	[°C]	-40...290
Mechanical data		
Weight	[g]	56
Version of sensing head		straight
Sensing head thread		M4

E20128

Fibre optic through-beam sensor

FE-00-A-A-M4

Sensing head length	[mm]	15
Total length	[mm]	600
Min. bending radius	[mm]	20; (for fixed installation)
Fibre arrangement		◉
Materials		Adapter: ABS
Fibre material		glass
Fibre head material		aluminium
Fibre sheath material		aluminium

Accessories

Items supplied	hexagon nuts: 4 x M4
	tooth lock washers: 4
	knurled nut: 1 x M11

Remarks

Pack quantity	1 pcs.