SAFETY INSTRUCTIONS

CT-MVS, CT-MXS, CT-MFS, CT-MBS, CT-WBS, CT-ERS, CT-APS, CT-AHS, CT-ARS, CT-SDS, CM-SRS, CM-SFS, CM-EFS, CM-ESS, CM-PFS, CM-PSS, CM-PVS, CM-PAS, CM-MPS, CM-MPN, CM-IWS.1, CM-IWS.2, CM-IWN.1, CM-IVN, CM-MSS.x, CM-TCS, CM-ENS.x

Measuring & Monitoring and Time Relays



AR تحذير: جهد كهربائي خطر!
راجع تعليمات التشغيل.
افصل الكهرباء وقم بتأمينها قبل العمل في هذا الجهاز
تنبيه! يجب عدم التركيب إلا من خلال شخص على دراية بمجال التقنية الكهربائية .

BG Предупреждение: Опасно напрежение! Вижте инструкциите за работа. Изключете и блокирайте захранването преди. да работите с устройството. Внимание! Да се монтира само от експерт електротехник.

CS Varování: Nebezpečné napětí! Viz návod k obsluze. Před zahájením prací na tomto zařízení odpojte a uzamkněte napájení. Pozor! Toto zařízení smí instalovat pouze osoba s elektrotechnickou odborností.

DA Advarsel: Farlig elektrisk spænding! Se installationsinstruktioner. Frakobl enheden, og afbryd strømforsyningen, før du arbejder med denne enhed. Giv agt! Installation må kun foretages af personer med elektroteknisk ekspertise.

DE Warnung: Gefährliche Spannung! Siehe Installationsanleitung. Vor dem Arbeiten Gerät ausschalten und von der Spannungsversorgung trennen. Achtung! Installation nur durch elektrotechnische Fachkraft.

EL Προειδοποίηση: Επικίνδυνη τάση! Ανατρέξτε στις οδηγίες λειτουργίας. Αποσυνδέστε και απομονώστε την παροχή ισχύος προτού ξε κινήσετε τις εργασίες σε αυτήν τη συσκευή. Προσοχή! Η εγκατάσταση πρέπει να γίνεται μόνο από αδειούχο ηλεκτρολόγο εγκαταστάτη.

EN Warning: Hazardous voltage! Refer to installation instructions. Disconnect and lock out power before working on this device. Attention! Installation by person with electrotechnical expertise only.

ES Advertencia: ¡Tensión peligrosa! Consulte las instrucciones de instalación. Antes de trabajar con este dispositivo, desconecte y bloquee la corriente. ¡Atención! La instalación debe ser realizada únicamente por un técnico electricista.

ET Hoiatus: Elektrilöögi oht! Lisateavet vaadake kasutusjuhendist. Enne selle seadmega töötamist ühendage lahti ja lukustage toide. Tähelepanu! Seadet tohib paigaldada ainult elektrotehnilise kogemusega isik.

FI Varoitus: Vaarallinen jännite! Katso asennusohje. atkaise virta ja estä virran kytkeminen lukituksella ennen töiden aloittamista. Huomio! Asennuksen saa suorittaa vain henkilö, jolla on kokemusta sähkötekniikasta.

FR Avertissement: Tension dangereuse! Consultez les consignes d'installation. Débranchez et verrouillez l'alimentation électrique avant d'entreprendre des travaux sur cet appareil. Attention! L'installation doit être effectuée uniquement par une personne ayant une expertise en électrotechnique.

HR Upozorenje: Opasan napon! Pogledajte upute za ugradnju. Odspojite i isključite struju prije rada na ovom uređaju. Pažnja! Ugradnja je dopuštena samo osobama stručnim u području elektrotehnike.

HU Figyelmeztetés: Veszélyes feszültség! Lásd a használati utasítást. Válassza le és zárja ki az áramellátást, mielőtt a berendezésen dolgozni kezd. Figyelem! Az üzembe helyezést csak elektrotechnikai szakértelemmel rendelkező személy végezheti el.

IT Attenzione: Tensione pericolosa! Fare riferimento alle istruzioni per l'uso. Prima di intervenire su questo dispositivo, scollegare e isolare tutte le fonti di alimentazione. Attenzione! L'installazione deve essere eseguita esclusivamente da un installatore qualificato.

LT Įspėjimas: Pavojinga įtampa! Žr. naudojimo instrukcijas. Atjunkite ir laikinai užblokuokite maitinimą prieš dirbdami su šiuo įrenginiu. Dėmesio! Įrengti gali tik asmuo, turintis elektrotechniko patirties.

LV Brīdinājums: Bīstams spriegums! Skatiet darba norādījumus. Pirms sākat darbu ar šo ierīci, atvienojiet un bloķējiet strāvas padevi. Uzmanību! Uzstādīšanu drīkst veikt tikai persona ar zināšanām par elektrotehniku.

NL Waarschuwing: Gevaarlijke spanning! Raadpleeg de installatie-instructies. Koppel dit apparaat los van de stroomvoorziening voordat u werkzaamheden uitvoert. Let op! Installatie mag alleen worden uitgevoerd door een monteur met elektrotechnische expertise.

NO Advarsel: Farlig spenning! Se i bruksanvisningen. Koble fra og steng av strømmen før du arbeider på denne enheten. Forsiktig! Montering skal kun utføres av kvalifiserte personer med elektrokompetanse.

PL Ostrzeżenie: Niebezpieczne napięcie! Patrz: instrukcja instalacji. Przed rozpoczęciem wykonywania pracy z tym urządzeniem odłącz i zablokuj zasilanie. Uwaga! Montaż może wykonywać wyłącznie osoba posiadająca doświadczenie elektrotechniczne.

PT Aviso: Tensão perigosa! Consulte as instruções de instalação. Desconecte e desligue a energia elétrica antes de trabalhar nesse dispositivo. Atenção! A instala ‹o de ve ser feita apenas por uma pessoa com especialidade eletrotŽcnica.

RO Avertisment: Tensiune electrică periculoasă! Consultați instrucțiunile de utilizare. Deconectați și închideți sursa de energie înainte de a lucra cu acest dispozitiv. Atenție! Instalarea trebuie realizată doar de către o persoană cu expertiză electrotehnică.

RU Предупреждение: Опасное электрическое напряжение! Обратитесь к инструкциям по монтажу. Отключите электропитание и обеспечьте безопасность перед началом работ. Внимание! Монтаж должен выполняться только специалистом по электротехническим работам.

SK Výstraha: Nebezpečné napätie! Pozrite si návod na použitie. Pred začatím prác na tomto zariadení odpojte a zablokujte napájanie. Pozor! Inštaláciu smie vykonávať len osoba s odbornými znalosťami v oblasti elektrotechniky.

SL Opozorilo: Nevarna napetost! Glejte navodila za uporabo. Pred delom na tej napravi izklopite in zaklenite električno napajanje. Pozor! Namestitev sme izvesti samo elektrotehnični strokovnjak.

SV Varning: Livsfarlig spänning! Se i bruksanvisningen. Frånkoppla och blockera anläggning eller en anläggningsdel innan arbete utförs. Obs! Får endast installeras av behörig elektriker.

TR Uyarı: Tehlikeli gerilim! Montaj talimatlarına bakın. Bu cihaz üzerinde çalışmadan önce elektriği kesin ve kilitleyin. Dikkat! Yalnızca elektroteknik uzmanlığa sahip kişiler tarafından kurulabilir.

ZH 警告：高压危险! 请参见操作手册。操作本设备前请断开并锁定电源。注意！安装仅限专业电工人员。

DISMANTLING INSTRUCTIONS

CT-MVS, CT-MXS, CT-MFS, CT-MBS, CT-WBS, CT-ERS, CT-APS, CT-AHS, CT-ARS, CT-SDS, CM-SRS, CM-SFS, CM-EFS, CM-ESS, CM-PFS, CM-PSS, CM-PVS, CM-PAS, CM-MPS, CM-MPN, CM-IWS.1, CM-IWS.2, CM-IWN.1, CM-IVN, CM-MSS.x, CM-TCS, CM-ENS.x

Measuring & Monitoring and Time Relays

Disclaimer
The information presented in this publication does not form part of any quotation or contract, is believed to be accurate and reliable and may be changed without notice. No liability will be accepted by the publisher for any consequences of its use. Publication thereof does not convey nor imply any license under patent - or other industrial or intellectual - property rights.

Target audience
This document is intended for ABB customers and for professional recyclers.

Package
You can recycle all materials used in the package. To avoid pollution caused by unnecessary transportation, the factory does not take back used packages. Contact your local ABB office for package recycling instructions if needed. ABB recommends package recycling as it preserves raw materials and reduces waste being landfilled.

Product manuals and sales brochures
To save natural resources and reduce paper waste, all product manuals are available in ABB Library and on the Internet.

Dismantling
You can dismantle the product manually or in a shredding machine.

Disposal
The main parts of the product can be recycled to preserve natural resources and energy. Product parts and materials should be dismantled and separated. Generally all metals, such as steel, aluminum, copper and its alloys, and precious metals can be recycled as material. Plastics, rubber, cardboard and other packaging material can be used in energy recovery.

To aid recycling, plastic parts are marked with an appropriate identification code. Contact your local ABB distributor for further information on environmental aspects. End of life treatment must follow international and national regulations.

Recycling information in accordance with the WEEE
The product is marked with the wheelie bin symbol. It indicates that at the end of life the product should enter the recycling system. You should dispose of it separately at an appropriate collection point and not place it in the normal waste stream.

The figure below shows the wheelie bin symbol indicating separate collection for electrical and electronic equipment (EEE). The horizontal bar underneath the crossed-out wheelie bin indicates that the equipment has been manufactured after the Directive came into force in 2005. The wheelie bin symbol is added to the type designation label of the product since 2017.

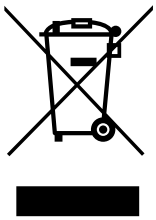

CT-MVS, CT-MXS, CT-MFS, CT-MBS, CT-WBS, CT-ERS, CT-APS, CT-AHS, CT-ARS, CT-SDS, CM-SRS, CM-SFS, CM-EFS, CM-ESS, CM-PFS, CM-PSS, CM-PVS, CM-PAS, CM-MPS, CM-IWS.1, CM-IWS.2, CM-MSS.x, CM-TCS, CM-ENS.x

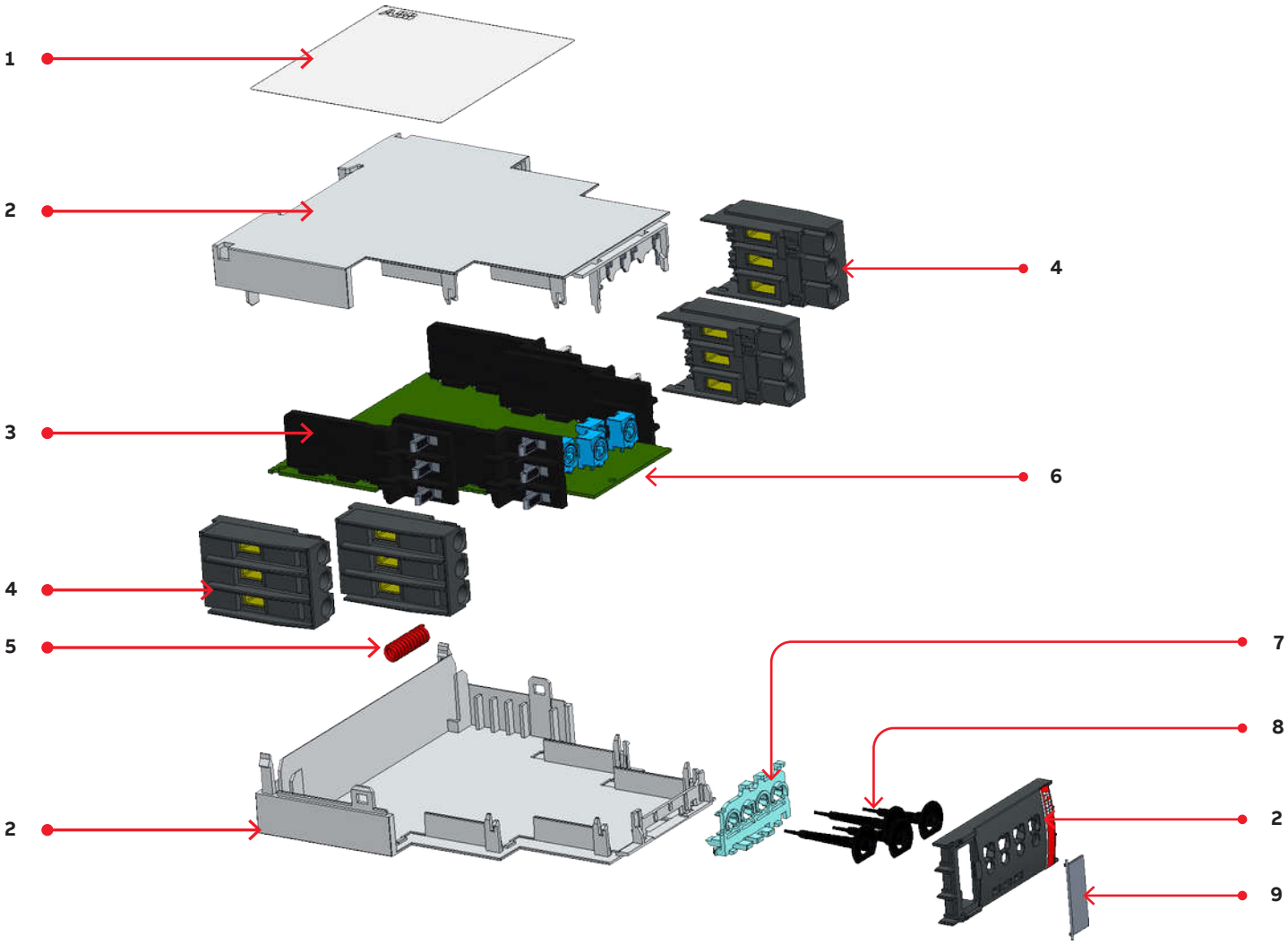

No.	Parts	Qty.	Category	Materials
1	Label	1	Paper	Various
2	Enclosure, Cover	3	Plastic	Thermoplastics
3	Terminal Holder	max. 4	Plastic	Thermoplastic and Steel
4	Terminals	max. 4	Plastic and Metal - Details see below	Thermoplastic, Steel and Copper Alloy
5	Spring	1	Metal	Steel
6	Circuit Board	1	Electrical	Various
7	Wheel Holder	max. 1	Plastic	Thermoplastics
8	Setting Wheels	max. 4	Plastic	Thermoplastics
9	Marking Plate	1	Plastic	Thermoplastics

CM-MPN, CM-IWN.1, CM-IVN

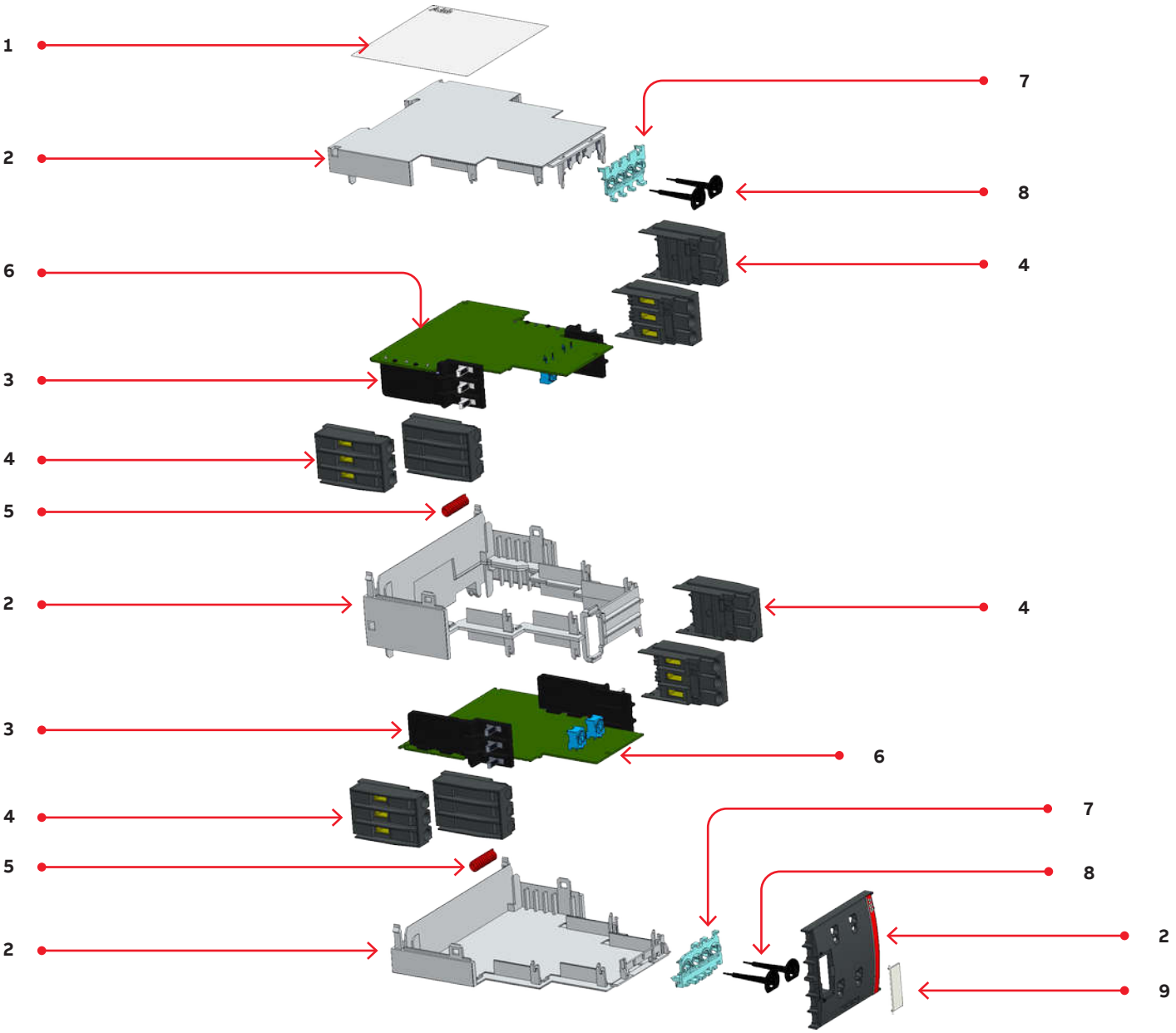

No.	Parts	Qty.	Category	Materials
1	Label	1	Paper	Various
2	Enclosure, Cover	4	Plastic	Thermoplastics
3	Terminal Holder	max. 8	Plastic	Thermoplastic and Steel
4	Terminals	max. 8	Plastic and Metal - Details see below	Thermoplastic, Steel and Copper Alloy
5	Spring	2	Metal	Steel
6	Circuit Board	2	Electrical	Various
7	Wheel Holder	max. 2	Plastic	Thermoplastics
8	Setting Wheels	max. 4	Plastic	Thermoplastics
9	Marking Plate	1	Plastic	Thermoplastics

For devices with push-In terminals

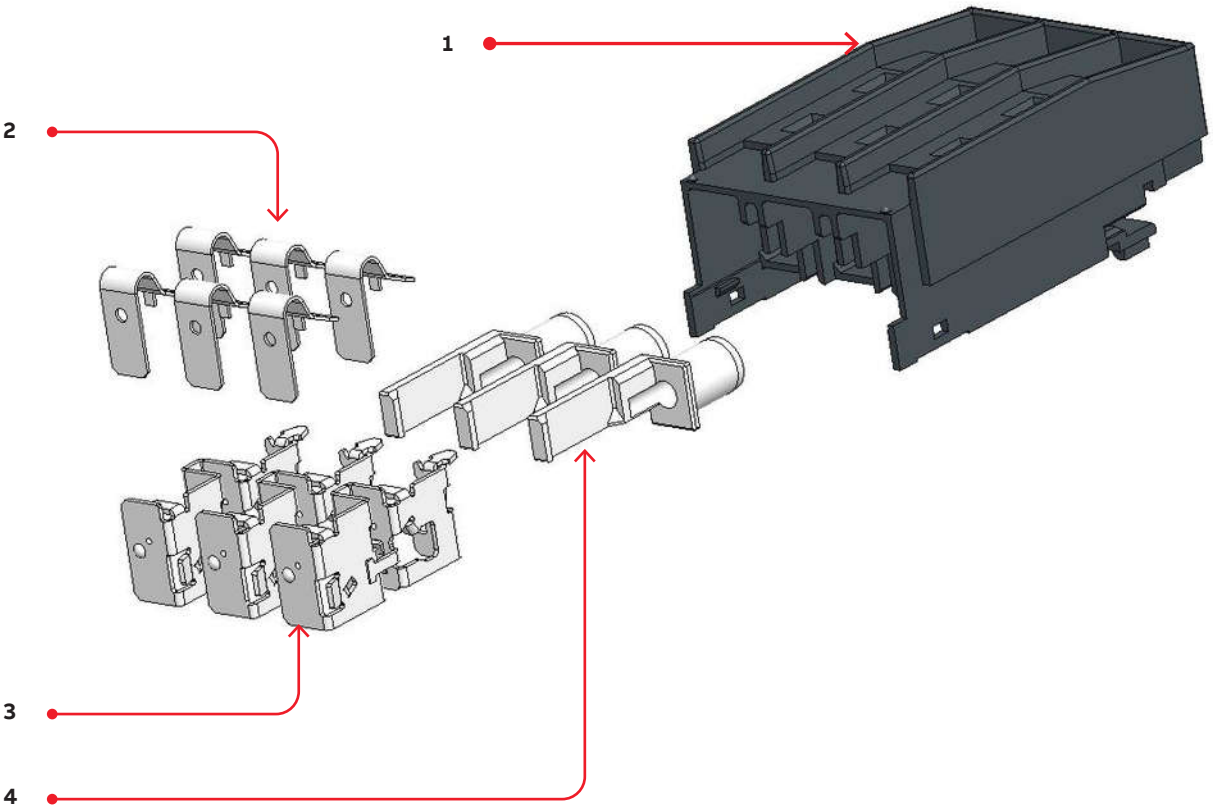

No.	Parts	Qty.	Category	Materials
1	Terminal Housing	1	Plastic	Thermoplastics
2	Spring	3	Metal	Steel
3	Frame	3	Metal	Steel
4	Pusher	3	Plastic	Thermoplastics

For devices with screw terminals

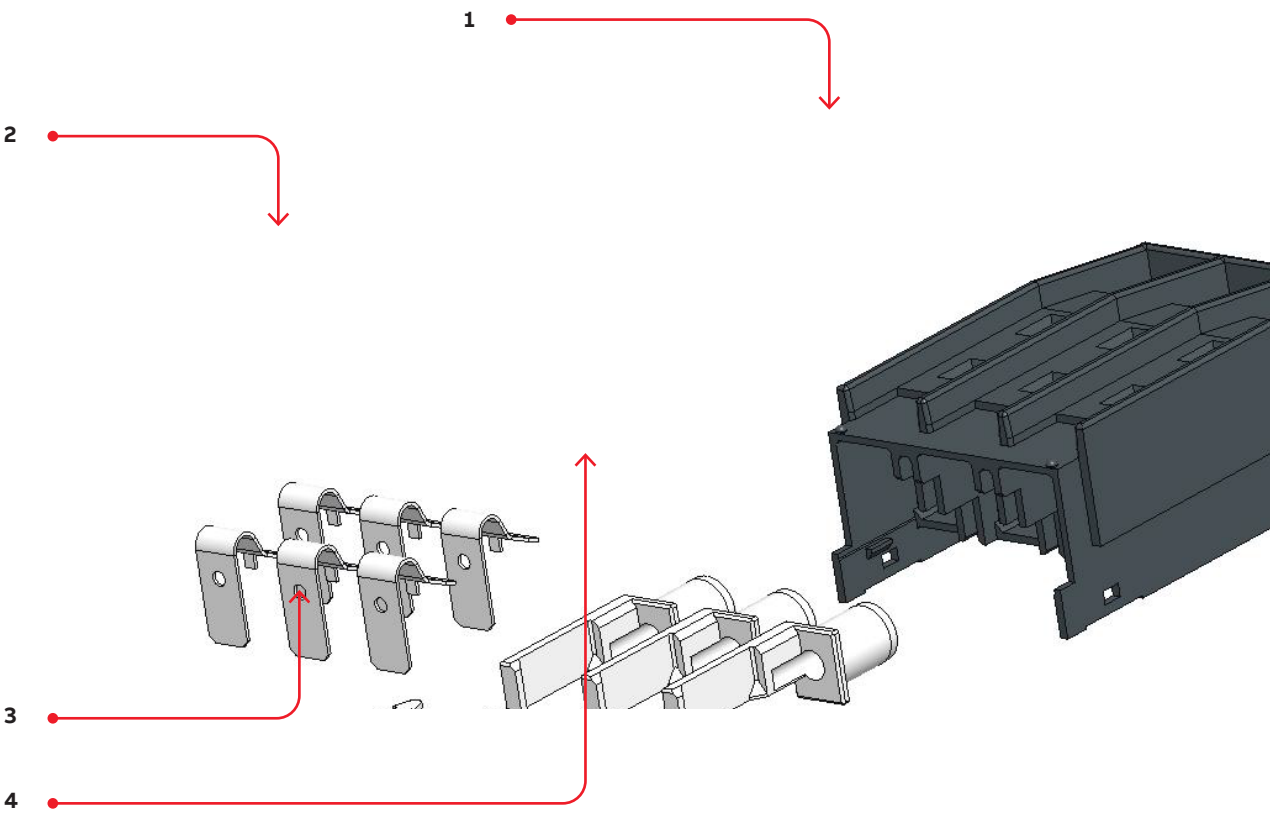

No.	Parts	Qty.	Category	Materials
1	Terminal Housing	1	Plastic	Thermoplastics
2	Plate	3	Metal	Stainless Steel
3	Frame	3	Metal	Copper Alloy
4	Screw	3	Metal	Steel

Products with requirements for special treatments

As reference for 22.5 mm housing: CM-IWS

No.	Parts	Weight (g)	Comment
6	Printed circuit board	71	Separate waste treatment

As reference for 45 mm housing: CM-IWN

No.	Parts	Weight (g)	Comment
6	Printed circuit boards	115	Separate waste treatment

ABB STOTZ-KONTAKT GmbH
Eppelheimer Strasse 82
69123 Heidelberg
Germany

abb.com/lowvoltage

We reserve the right to make technical changes or modify the contents of this document without prior notice. With regard to purchase orders, the agreed particulars shall prevail. ABB AG does not accept any responsibility whatsoever for potential errors or possible lack of information in this document.

We reserve all rights in this document and in the subject matter and illustrations contained therein. Any reproduction, disclosure to third parties or utilization of its contents – in whole or in parts – is forbidden without prior written consent of ABB.
Copyright© 2024 ABB AG
All rights reserved

Document number 1SAC200290H0001 Rev. B (04/2024)