Aluminum Protecting Ring and Shielding Plate
For Inductive Encoders Ri-QR24
M2-QR24

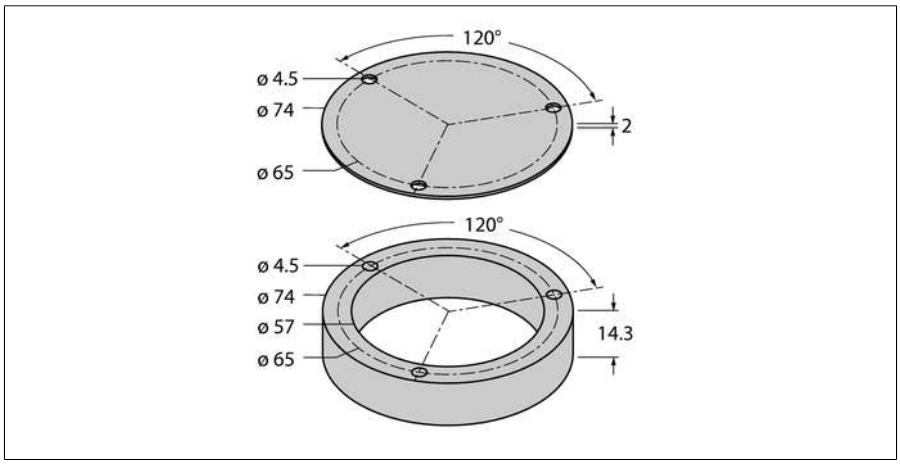

- **Positioning element**
- **Hollow shaft, internal diameter 6 mm**
- **Incl. mounting option for shaft adapter**

Type designation	M2-QR24
Ident no.	1590917
Housing material	Aluminium

Edition • 2018-05-20T14:46:17+02:00

Hans Turck GmbH & Co.KG ● D-45472 Mülheim an der Ruhr ● Witzlebenstraße 7 ● Tel. 0208 4952-0 ● Fax 0208 4952-264 ● more@turck.com ● www.turck.com