

# Ultrasonic sensor

# UB1000-18GM75-U-V15

- Analog output 0 ... 10 V
- Measuring window adjustable
- Selectable sound lobe width
- Program input
- Synchronization options
- Deactivation option
- Temperature compensation
- Very small unusable area

Single head system

## Dimensions

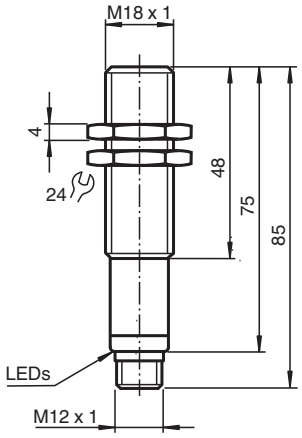


## Technical Data

| | | |
|---|---|---|
| **General specifications** | | |
| Sensing range | | 70 ... 1000 mm |
| Adjustment range | | 90 ... 1000 mm |
| Dead band | | 0 ... 70 mm |
| Standard target plate | | 100 mm x 100 mm |
| Transducer frequency | | approx. 255 kHz |
| Response delay | | approx. 125 ms |
| **Indicators/operating means** | | |
| LED yellow | | solid yellow: object in the evaluation range<br>yellow, flashing: program function, object detected |

Release date: 2023-02-15 Date of issue: 2023-02-15 Filename: 204536_eng.pdf

## Technical Data

| | | |
|---|---|---|
| LED red | | solid red: Error<br>red, flashing: program function, object not detected |
| **Electrical specifications** | | |
| Operating voltage | $U_B$ | 15 ... 30 V DC , ripple 10 %$_{SS}$ |
| No-load supply current | $I_0$ | ≤ 50 mA |
| **Input/Output** | | |
| Synchronization | | 1 synchronous connection, bi-directional<br>0-level: -$U_B$...+1 V<br>1-level: +4 V...+$U_B$<br>input impedance: > 12 kΩ<br>synchronization pulse: ≥ 100 µs, synchronization interpulse period: ≥ 2 ms |
| Synchronization frequency | | |
| Common mode operation | | max. 40 Hz |
| Multiplex operation | | ≤ 40 Hz / n, n = number of sensors, n ≤ 5 |
| **Input** | | |
| Input type | | 1 program input<br>lower evaluation limit A1: -$U_B$ ... +1 V, upper evaluation limit A2: +4 V ... +$U_B$<br>input impedance: > 4.7 kΩ, pulse duration: ≥ 1 s |
| **Output** | | |
| Output type | | 1 analog output 0 ... 10 V |
| Resolution | | 0.35 mm |
| Deviation of the characteristic curve | | ± 1 % of full-scale value |
| Repeat accuracy | | ± 0.1 % of full-scale value |
| Load impedance | | > 1 kOhm |
| Temperature influence | | ± 1.5 % of full-scale value |
| **Compliance with standards and directives** | | |
| Standard conformity | | |
| Standards | | EN IEC 60947-5-2:2020<br>IEC 60947-5-2:2019<br>EN 60947-5-7:2003<br>IEC 60947-5-7:2003 |
| **Approvals and certificates** | | |
| UL approval | | cULus Listed, Class 2 Power Source |
| CCC approval | | CCC approval / marking not required for products rated ≤36 V |
| **Ambient conditions** | | |
| Ambient temperature | | -25 ... 70 °C (-13 ... 158 °F) |
| Storage temperature | | -40 ... 85 °C (-40 ... 185 °F) |
| **Mechanical specifications** | | |
| Connection type | | Connector plug M12 x 1 , 5-pin |
| Housing diameter | | 18 mm |
| Degree of protection | | IP67 |
| Material | | |
| Housing | | brass, nickel-plated |
| Transducer | | epoxy resin/hollow glass sphere mixture; polyurethane foam |
| Mass | | 60 g |
| **Factory settings** | | |
| Output | | evaluation limit A1: 90 mm<br>evaluation limit A2: 1000 mm<br>output function: rising ramp |
| Beam width | | wide |

Release date: 2023-02-15 Date of issue: 2023-02-15 Filename: 204536_eng.pdf

## Connection

**Standard symbol/Connections:**
(version U)

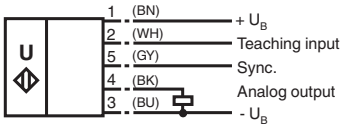


Core colours in accordance with EN 60947-5-2.

## Connection Assignment

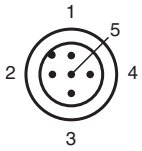


Wire colors in accordance with EN 60947-5-2

| | | |
|---|---|---|
| 1 | BN | (brown) |
| 2 | WH | (white) |
| 3 | BU | (blue) |
| 4 | BK | (black) |
| 5 | GY | (gray) |

## Characteristic Curve

### Characteristic response curve

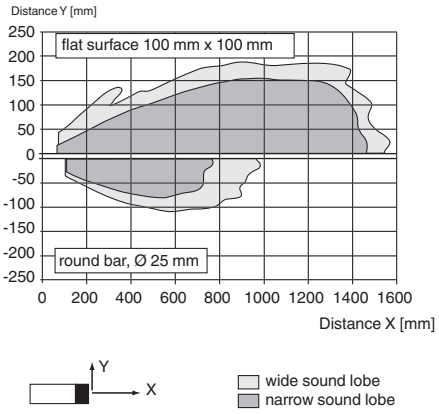


Release date: 2023-02-15 Date of issue: 2023-02-15 Filename: 204536_eng.pdf

## Characteristic Curve

### Programming the analog output mode

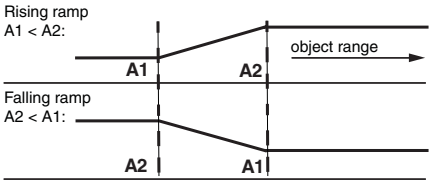


## Accessories

| | | |
|---|---|---|
|  | **UB-PROG2** | Programming unit |
|  | **OMH-04** | Mounting aid for round steel ø 12 mm or sheet 1.5 mm ... 3 mm |
|  | **BF 18** | Mounting flange, 18 mm |
|  | **BF 18-F** | Plastic mounting adapter, 18 mm |
|  | **BF 5-30** | Universal mounting bracket for cylindrical sensors with a diameter of 5 ... 30 mm |
|  | **UVW90-K18** | Ultrasonic -deflector |
|  | **M18K-VE** | Plastic nuts with centering ring for the vibration-free mounting of cylindrical sensors |
|  | **V15-G-2M-PVC** | Female cordset single-ended M12 straight A-coded, 5-pin, PVC cable grey |
|  | **V15-W-2M-PVC** | Female cordset single-ended M12 angled A-coded, 5-pin, PVC cable grey |

Release date: 2023-02-15 Date of issue: 2023-02-15 Filename: 204536_eng.pdf

# Programming

## Programming procedure

The sensor features a programmable analog output with two programmable evaluation boundaries. Programming the evaluation boundaries and the operating mode is done by applying the supply voltage $-U_B$ or $+U_B$ to the Teach-In input. The supply voltage must be applied to the Teach-In input for at least 1 s. LEDs indicate whether the sensor has recognized the target during the programming procedure.

**Note:**
Evaluation boundaries may only be specified directly after Power on. A time lock secures the adjusted switching points against unintended modification 5 minutes after Power on. To modify the evaluation boundaries later, the user may specify the desired values only after a new Power On.

**Note:**
If a programming adapter UB-PROG2 is used for the programming procedure, button A1 is assigned to $-U_B$ and button A2 is assigned to $+U_B$.

### Programming the analog output

**Rising ramp**

1. Place the target at the near end of the desired evaluation range
2. Program the evaluation boundary by applying $-U_B$ to the Teach-In input (yellow LED flashes)
3. Disconnect the Teach-In input from $-U_B$ to save the evaluation boundary
4. Place the target at the far end of the desired evaluation range
5. Program the evaluation boundary by applying $+U_B$ to the Teach-In input (yellow LED flashes)
6. Disconnect the Teach-In input from $+U_B$ to save the evaluation boundary

**Falling ramp**

1. Place the target at the far end of the desired evaluation range
2. Program the evaluation boundary by applying $-U_B$ to the Teach-In input (yellow LED flashes)
3. Disconnect the Teach-In input from $-U_B$ to save the evaluation boundary
4. Place the target at the near end of the desired evaluation range
5. Program the evaluation boundary by applying $+U_B$ to the Teach-In input (yellow LED flashes)
6. Disconnect the Teach-In input from $+U_B$ to save the evaluation boundary

### Adjusting the sound cone characteristics:

The ultrasonic sensor enables two different shapes of the sound cone, a wide angle sound cone and a small angle sound cone.

**1. Small angle sound cone**

- switch off the power supply
- connect the Teach-In input wire to $-U_B$
- switch on the power supply
- the red LED flashes once with a pause before the next.
- yellow LED: permanently on: indicates the presence of an object or disturbing object within the sensing range
- disconnect the Teach-In input wire from $-U_B$ and the changing is saved




**2. Wide angle sound cone**

- switch off the power supply
- connect the Teach-In input wire with $+U_B$
- switch on the power supply
- the red LED double-flashes with a long pause before the next.
- yellow LED: permanently on: indicates an object or disturbing object within the sensing range
- disconnect the Teach-In input wire from $+U_B$ and the changing is saved




# Factory Setting

## Factory settings

See technical data.

# Indication

The sensor provides LEDs to indicate various conditions.

Release date: 2023-02-15 Date of issue: 2023-02-15 Filename: 204536_eng.pdf

| | Red LED | Yellow LED |
|---|---|---|
| **During Normal operation** | | |
| Proper operation | | |
| Object in evaluation range | Off | On |
| No object in evaluation range | Off | Off |
| Interference (e.g. compressed air) | On | Remains in previous state |
| **During sensor programming** | | |
| Object detected | Off | Flashes |
| No object detected | Flashes | Off |
| Object uncertain (programming invalid) | On | Off |

## Commissioning

### Synchronization

This sensor features a synchronization input for suppressing ultrasonic mutual interference ("cross talk"). If this input is not connected, the sensor will operate using internally generated clock pulses. It can be synchronized by applying an external square wave. The pulse duration must be ≥ 100 µs. Each falling edge of the synchronization pulse triggers transmission of a single ultrasonic pulse. If the synchronization signal remains low for ≥ 1 second, the sensor will revert to normal operating mode. Normal operating mode can also be activated by opening the signal connection to the synchronization input (see note below).
If the synchronization input goes to a high level for > 1 second, the sensor will switch to standby mode. In this mode, the outputs will remain in the last valid output state.

**Note:**
If the option for synchronization is not used, the synchronization input has to be connected to ground (0 V) or the sensor must be operated via a V1 cordset (4-pin).
The synchronization function cannot be activated during programming mode and vice versa.

**The following synchronization modes are possible:**

1. Several sensors (max. number see technical data) can be synchronized together by interconnecting their respective synchronization inputs. In this case, each sensor alternately transmits ultrasonic pulses in a self multiplexing mode. No two sensors will transmit pulses at the same time (see note below).
2. Multiple sensors can be controlled by the same external synchronization signal. In this mode the sensors are triggered in parallel and are synchronized by a common external synchronization pulse.
3. A separate synchronization pulse can be sent to each individual sensor. In this mode the sensors operate in external multiplex mode (see note below).
4. A high level (+$U_B$) on the synchronization input switches the sensor to standby mode.

**Note:**
Sensor response times will increase proportionally to the number of sensors that are in the synchronization string. This is a result of the multiplexing of the ultrasonic transmit and receive signal and the resulting increase in the measurement cycle time.

## Installation Conditions

If the sensor is installed at places, where the environment temperature can fall below 0 °C, for the sensors fixation, one of the mounting flanges BF18, BF18-F or BF 5-30 must be used.
In case of direct mounting of the sensor in a through hole using the steel nuts, it has to be fixed at the middle of the housing thread. If a fixation at the front end of the threaded housing is required, plastic nuts with centering ring (accessories) must be used.

Release date: 2023-02-15 Date of issue: 2023-02-15 Filename: 204536_eng.pdf