10713-534 19" PUSHER FAN, 2 U, AXIAL, 230 VAC, BOARD DEPTH 160-MM, 445 - 530 M³H



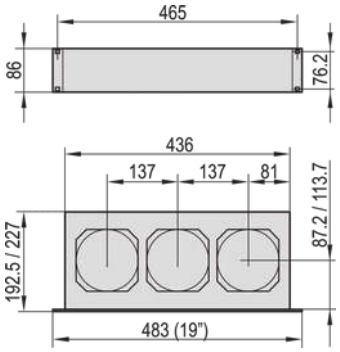

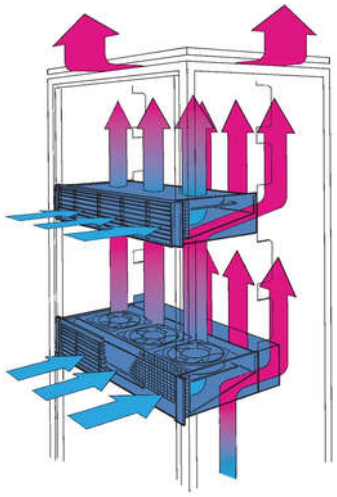

KEY FEATURES

- Contact protection in accordance with DIN EN ISO 13857
- Integrated air deflector prevents heat buildup in the assemblies mounted below
- Can be adapted to subracks
- Optionally with additional rear fan, 2 U, for active cooling of assemblies beneath the pusher fan

PRODUCT ATTRIBUTES

- Product Type: Fan Unit
- Input Voltage AC: 230 V

ADDITIONAL PRODUCT DETAILS

Fan tray with integrated pusher fan.

Please order mains cable separately.

CERTIFICATIONS







North America
All locations
+1.763.422.2661
Chat with us:
schroff.nvent.com

Europe
Straubenhardt, Germany
+49.7082.794.0
Betschdorf, France
+33.3.88.90.64.90
Warsaw, Poland
+48.22.209.98.35
Assago, Italy
+39.02.932.7141
Chat with us:
schroff.nvent.com

Asia
Shanghai, China
+86.21.2412.6943
Qingdao, China
+86.532.8771.6101
Singapore
+65.6768.5800
Shin-Yokohama, Japan
+81.45.476.0271
Chat with us:
schroff.nvent.com

Middle East & India
Dubai, United Arab Emirates
+971.4.378.1700
Bangalore, India
+91.80.6715.2001
Istanbul, Turkey
+90.216.250.7374
Chat with us:
schroff.nvent.com



Our powerful portfolio of brands:
nVent.com **CADDY ERICO HOFFMAN RAYCHEM SCHROFF TRACER**

© 2023 nVent. All nVent marks and logos are owned or licensed by nVent Services GmbH or its affiliates. All other trademarks are the property of their respective owners.

nVent reserves the right to change specifications without notice.