1591XXCSFL Enclosure

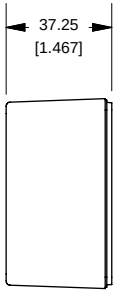

SIDE VIEW OF BOX

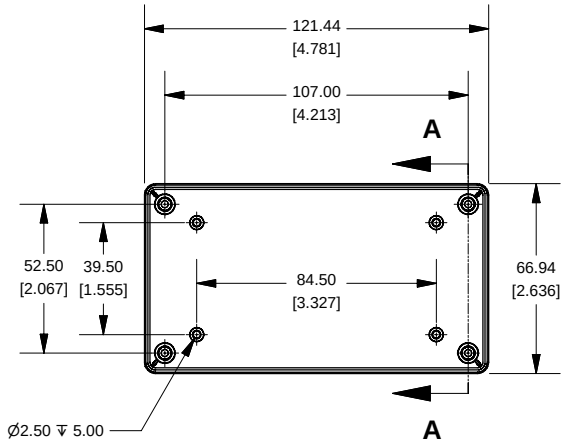

TOP VIEW OF BOX

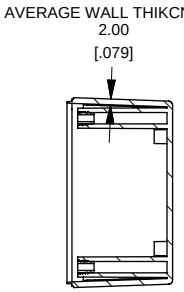

SECTION A-A



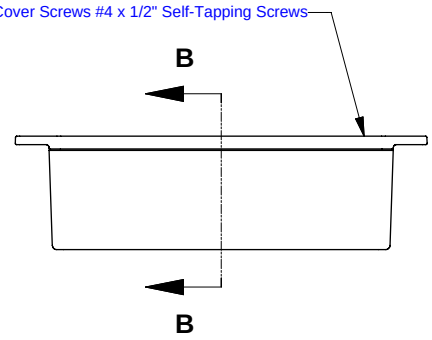

SIDE VIEW OF ENCLOSURE

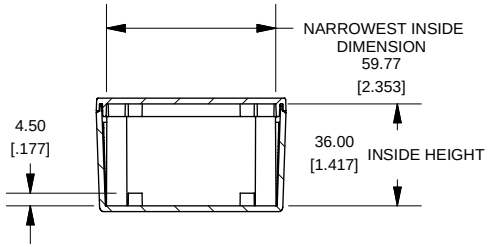

SECTION B-B

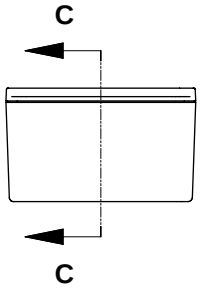

SIDE VIEW OF ENCLOSURE

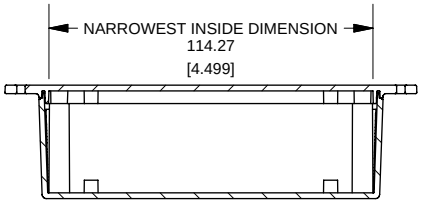

SECTION C-C

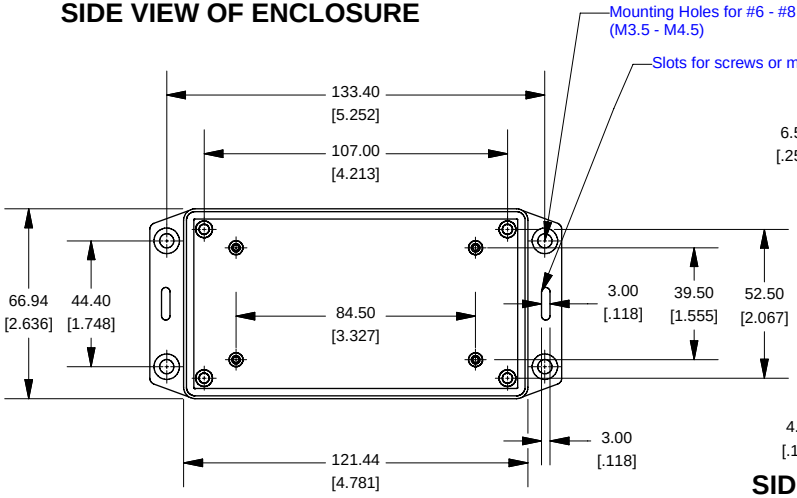

BOTTOM VIEW OF LID

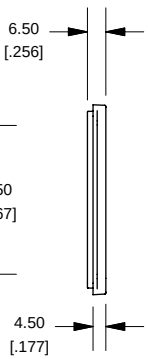

SIDE VIEW OF LID

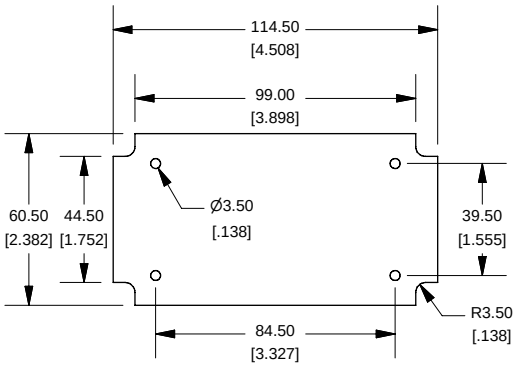

Max Size PCB. Fits in Box or in Lid.
Not supplied with Enclosure

Note:

Enclosures can be Factory Modified (Milling, Drilling, Printing etc.)
Solid models of this enclosure available in STEP or IGES.
Contact Factory mjm@hammondmfg.com

NOTE
Enclosure molded from GPABS UL-94HB plastic
Other materials / colours available. Consult factory.

1591XXCSFL	
1591XXCSFL Enclosure	
Black - RAL 7011	1591XXCSFLBK
ACCESSORIES	
Black Cover Screws	1591TS100BK
PCB Screws [#4 x 1/4" self-tapping (6.4mm)]	1593ATS50 (pkg 50) 1593ATS100 (pkg 100)

HAMMOND MANUFACTURING™

www.hammondmfg.com