206387
BEK-R70/120-G5TI-IBS-DIF
Ringlight

- Constant level of light intensity over the entire voltage range
- Internal control of power output
- Homogeneous illumination
- High protection type IP 67
- External trigger input
- High efficiency
- Light intensity can be adjusted
- Low levels of heat produced
- Sturdy housing design
- Metal casing



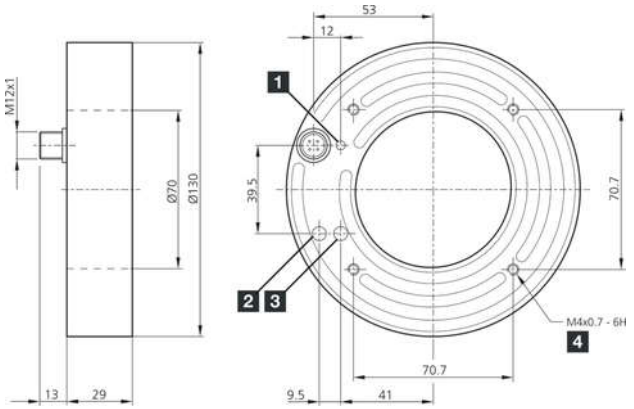

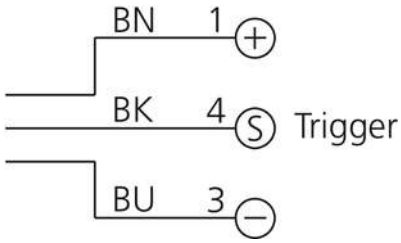

1) LED OPERATION
2) brightness
3) Trigger
4) 8 mm deep

BK: black BN: brown BU: blue

Function

Technical data (typ.)	+20°C, 24 V DC
Service voltage	18 … 35 V DC (Supply Class 2)
No-load current (max.)	560 mA (18 V DC)
Power	10.0 W (24 V DC)
Inverse polarity protection	Yes
Insulation voltage endurance	500 V
Diameter	Ø 70 / Ø 130 mm (Diameter)
Housing material	Aluminum (Anodized)
Material	PMMA, diffuse (Protection optics)
Protection class	III, operation on protective low voltage
Risk group (DIN EN 62471)	Free group
Approvals	UL
Design	Ringlight
Trigger input high level	3.3 … 35.0 V
Trigger input low level	< 2.8 V
Light source	LED
Color	White (diffuse)
Wavelength	6500 K
Deflection angle FWHM	120°
Light intensity	■ 9.20 kLx (100.0 mm) ■ 3.50 kLx (200.0 mm) ■ 0.800 kLx (500.0 mm)
Control	Integrated power control

206387
BEK-R70/120-G5TI-IBS-DIF
Ringlight

Technical data (typ.)	+20°C, 24 V DC
Display	LED Green - Operating display
Shock/vibration load	30 g, 11 ms / 10 … 55 Hz, 1.0 mm
Ambient temperature during operation	0 … +40 °C
Protection type	IP 67
Connection	Connector, M12, 3-pin
Connection cable	VK …

More information / accessories	https://www.di-soric.com/206387

© di-soric . Right to change reserved