EBC015

Splitter box

ZDO4H055MSS0005H07

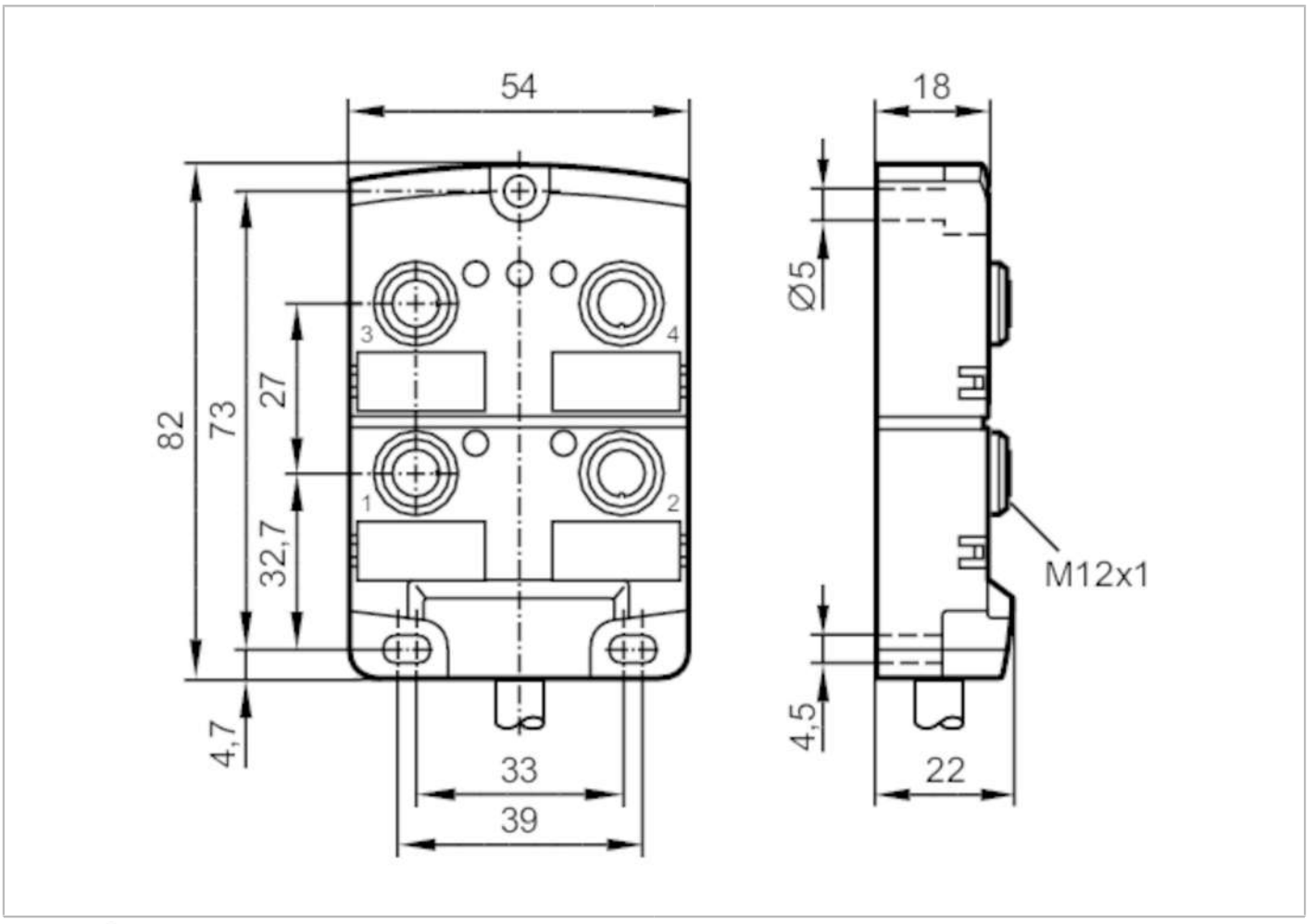

Application		
Special feature		Free from silicone; Halogen-free; Gold-plated contacts; Drag chain suitability
Free from silicone		yes
Electrical data		
Operating voltage	[V]	10...30 DC; ("supply class 2" to cULus)
Protection class		II
Max. current load per module/slot	[A]	4
Max. current load total	[A]	12
Outputs		
Electrical design		PNP
Operating conditions		
Ambient temperature	[°C]	-25...80
Ambient temperature (moving)	[°C]	-5...60
Protection		IP 67; IP 68
Tests / approvals		
UL approval	Enclosure type	Type 1

EBC015

Splitter box

ZDO4H055MSS0005H07

Mechanical data			
Weight	[g]	540	
Dimensions	[mm]	22 x 54 x 82	
Materials		PA	
Moulded-body material		PA	
Number of ports splitter box		4	
Connector type		M12	
Drag chain suitability		yes	
Drag chain suitability		bending radius for flexible use	min. 10 x cable diameter
		bending cycles	> 2 Mio.

Displays / operating elements		
Display	switching status	4 x LED, yellow
	operation	1 x LED, green

Accessories	
Items supplied	Protective caps: 2
	labels: 4

Remarks	
Pack quantity	1 pcs.

Electrical connection

Cable: 5 m, PUR, Halogen-free, black, Ø 7.5 mm; 4 x 0.34 mm² (43 x Ø 0.1 mm) + 3 x 1 mm² (55 x Ø 0.15 mm)

Electrical connection - slot

Connector: 4 x M12; coding: A; Moulded body: PA; Contacts: gold-plated; Tightening torque: 0.8...1.5 Nm

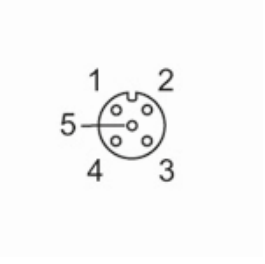

EBC015

Splitter box

ZDO4H055MSS0005H07

Connection

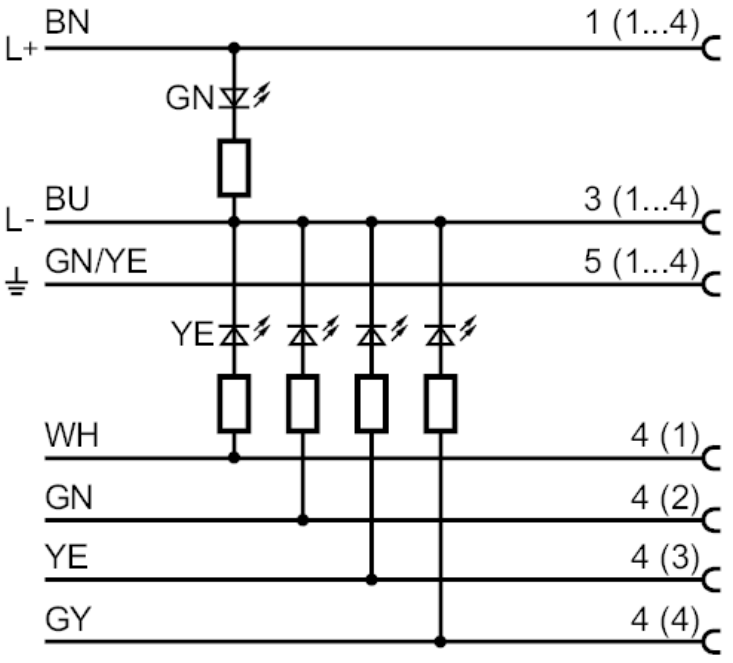

	Core colours :
BN =	brown
BU =	blue
GN =	green
GN/YE =	green/yellow
GY =	grey
WH =	white
YE =	yellow