

Contents

	Page
Product Overview , Features	2
Product Range and Accessories	
Downloads	
Quickstart Guide	3
Installation	
One Time Only Initialisation	
FAQ's & Product Specs	4
Compatible Products	5
Keypad layouts	6
Code Tables – default	7
Configuration Utility	8
Code Tables – full list	10
Product Dimensions, Cable Drawings	17
Panel Cutout Drawings	18
Copyright Notice	23
Change History	25

Product Overview

This self-contained device is ready to use. It can be easily attached to the rear surface of most Storm keypads to provide connectivity and communication with USB compatible host systems. Factory configured for standard numeric data entry, this versatile device can also be user programmed to output any supported USB code; making the 450 Series encoder the ideal keypad interface for most applications.

Features

Generic keyboard (HID) device – no additional drivers needed
Factory configured to encode telephone or calculator format numeric keypads
Output code table can be customised using Storm's USB Configuration Utility
Integrated power supply for keypad illumination
450i version provides additional colour & brightness control for keypad illumination
450i version features a piezo sounder for optional key press confirmation or application driven status signal
Simple connection via a USB Mini-B socket
Compact, self contained form factor
Compatible with most Storm 4, 12 and 16 key format keypads
(including Storm 700, 720,1000, 2000, 3000, GFX and PLX product series)

Product Range and Accessories

Part Number	Description
4500-10	450i Encoder with Buzzer and Illumination Control
4500-00	450 Encoder
4500-01	USB Cable 1 metre - type A to angled mini B

Note :
These part numbers are for on line ordering directly from Storm Interface.
When bought through broadline distribution they have an additional suffix to allow for distributor specific labelling/marking requirements e.g.

4500-102	450i Encoder with Buzzer

Downloads

4500-SW01	USB Configuration Utility
450i-LIT-01	Product Brochure
450-xx-08KT	Installation Sheet
450 USB Manual	Engineering Manual (this document)

Quickstart Guide

Before starting make sure that you have :

- The encoder
- A compatible Storm keypad.
- A USB mini-B cable between your keypad and the host computer.
- A panel with the correct cutout for your keypad
- A copy of the configuration utility if you want to customise the configuration

Installation

- Ensure your computer is powered up before connecting the encoder.
- Note that there are two different sockets for the keypad connection, depends if a 4 way or 12/16 way keypad is being used. Make sure that the correct socket is used before using the sticky pads to fix the encoder in place.

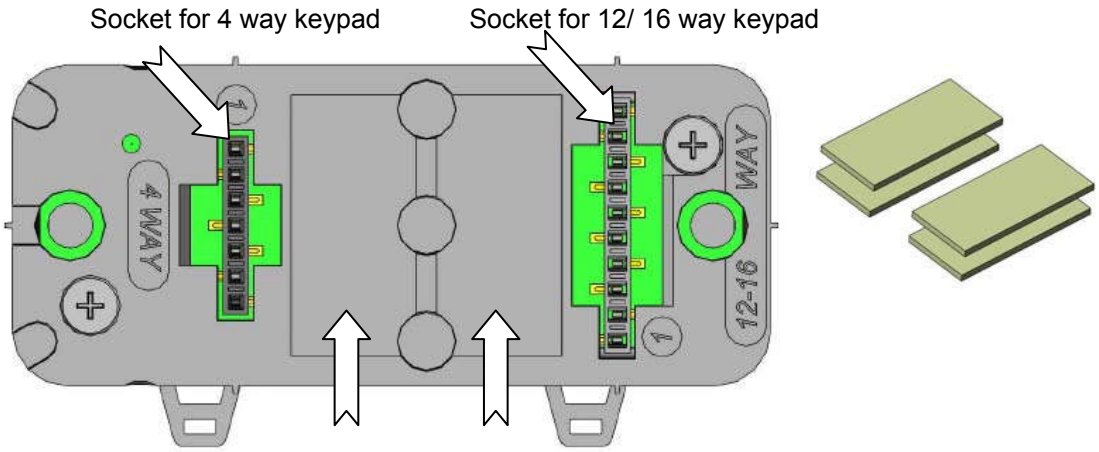

Sticky pads go here
(one per position, unless using 700 Series underpanel which needs 2 per)

- Push the encoder onto the keypad pins ; make sure the pad sticks down
- Plug in the mini B USB cable on the side of the encoder

One Time Only Initialisation

This initialisation process must be completed the first time you turn it on. The encoder has to recognise the keypad, and you have to select the layout that matches the keypad layout.

a) **PRESS AND HOLD** the bottom right hand key on the keypad – this tells the encoder which keypad is connected

b) Connect the encoder cable to the pc

c) **RELEASE KEY IF** you want function key (4 way) / telephone layout (12/16 way) code table

or

d) **KEEP THE KEY PRESSED FOR 10 SEC IF** you want cursor (4 way) / calculator (12/16 way) code table

Now check that you are getting the correct characters on screen. If you need to reconfigure the encoder you can change the code table (or reset to a pre-loaded code table) with the USB Configuration Utility from www.storm-interface.com

F.A.Q's

Does this encoder need a special driver ?	No – it works with the standard USB keyboard driver
Does the utility work on any pc ?	At present it does not run on Linux or Mac os The utility requires Windows XP or later
What's the USB connection ?	Mini-B socket
Do I need to use the sticky pads ?	These are included to retain the encoder in service
What custom USB codes can I assign ?	See the code tables on page 11
What do I do if I have wrongly initialised the product ?	Download & use the config utility to reset the defaults
Why is the socket longer than the pinstrip on my keypad?	The end pins power the illuminated keypads.

Ratings & Performance

Operational temperature	-20ºC to +60ºC
Storage temperature	-20ºC to +70ºC
Humidity	10% to 90% non-condensing
Vibration and shock	ETSI 300 019 5M3
Operating voltage	5V +/- 5% (USB)
Operating current	20mA (excluding keypad illumination current)
Safety	EU Low Voltage Directive
EMC:	Emissions and Immunity: FCC part 15 class A
	EN55022, EN55024
	ESD: Up to +/- 15kV air discharge, +/- 7.5kV contact discharge
EU RoHS	
WEEE Directive compliant	

Compatible Products

	4 Key	12 Key	16 Key	Note
700 Series	☑	☑	☑	Use additional sticky pads for 700 Series Underpanel Fixing
720 Series	☑	☑	☑	
1000 Series	☑	☑	☑	
PLX Series	☑	☑	☑	
2000 Series	☑	☑	☑	
GFX	☑	☑	☑	
3000 Series	☑	☑	☑	
3000 Illuminator				Illumination only supported on keypads made from Sept 2013
GFX Illuminator				Illumination only supported on keypads made from Sept 2013
	Use the 7 way socket for 4 key pad	Use the 10 way socket for 12/16 key pad		

Keypad Layouts

Keypad Layouts

Default Code Table (US English)



4-Way Function



12-Way Telephone

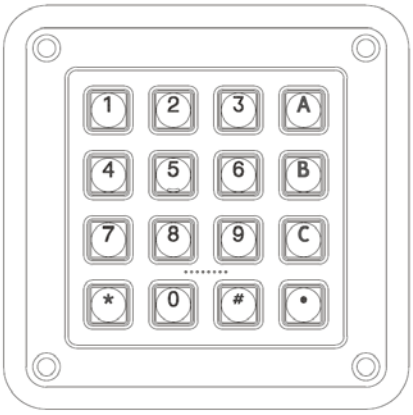

16-Way Telephone

Keypad Layouts

Alternate Code Table (US English)



4-Way Cursor



12-Way Calculator

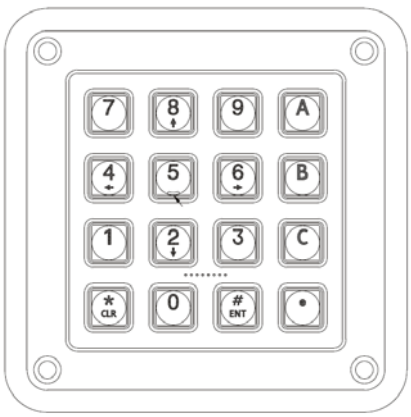

16-Way Calculator

Default Code Tables (remember host set to UK English gives £ instead of #)

Row	Column	4 way codes Function (hex)	12 way code Telephone(hex)	16 way code Telephone(hex)
A	1	F1 (3A)	1 (1E)	1 (1E)
B	1	F2 (3B)	4 (21)	4 (21)
C	1	F3 (3C)	7 (24)	7 (24)
D	1	F4 (3D)	* (E1, 25)	* (E1, 25)
A	2	-	2 (1F)	2 (1F)
B	2	-	5 (22)	5 (22)
C	2	-	8 (25)	8 (25)
D	2	-	0 (27)	0 (27)
A	3	-	3 (20)	3 (20)
B	3	-	6 (23)	6 (23)
C	3	-	9 (26)	9 (26)
D	3	-	# (E1, 20)	# (E1, 20)
A	4	-	-	A (04)
B	4	-	-	B (05)
C	4	-	-	C (06)
D	4	-	-	. (37)

Alternate Code Table (to get the arrow keys on a 12/16 way keypad then switch NumLock off)

Row	Column	4 way code Cursor (hex)	12 way code Calculator (hex)	16 way code Calculator (hex)	Output for 12/16 way with NumLock off
A	1	↑ (52)	7 (5F)	7 (5F)	HOME
B	1	← (50)	4 (5C)	4 (5C)	←
C	1	→ (4F)	1 (59)	1 (59)	END
D	1	↓ (51)	* (E1, 25)	* (E1, 25)	*
A	2	-	8 (60)	8 (60)	↑
B	2	-	5 (5D)	5 (5D)	
C	2	-	2 (5A)	2 (5A)	↓
D	2	-	0 (62)	0 (62)	
A	3	-	9 (61)	9 (61)	PgUp
B	3	-	6 (5E)	6 (5E)	→
C	3	-	3 (5B)	3 (5B)	PgDn
D	3	-	# (E1, 20)	# (E1, 20)	#
A	4	-	-	A (04)	A
B	4	-	-	B (05)	B
C	4	-	-	C (06)	C
D	4	-	-	. (37)	.

Configuration Utility

To customise the output codes just download and install the Configuration Utility from *this link.*
This lets you do the following :-

Scan the encoder in order to	Confirm the encoder is connected Show which version of firmware is installed Show which keypad is set (4, 12 or 16 key) Show which code table is selected (default, alternate or customised)
And also	Change the keypad setting Change the selected code table Change the buzzer volume (450i only) Change the brightness on illuminated keypads (450i only) Self test the encoder
For re-legendable keypads	Customise the code table by assigning a USB code to each key Add a modifier in front of each USB code Save this configuration Export or Import configuration files
For maintenance purposes	Update the encoder firmware if a new version is released Restore all settings to original factory defaults.

Configuration Utility User Guide

Download from www.storm-interface.com and install on a Windows PC with XP or later

Run the application.

Plug in the encoder + keypad.

Scan the encoder. The configuration will be displayed as below on the home screen.

If you have a standard layout keypad then the output from the default code table will correspond to the keypad
If you have a keypad designed to allow customisation of keytop graphics then you need to assign a code to each key.

The configuration file is saved to the pc and to the encoder when the **Save Changes** button is pressed.

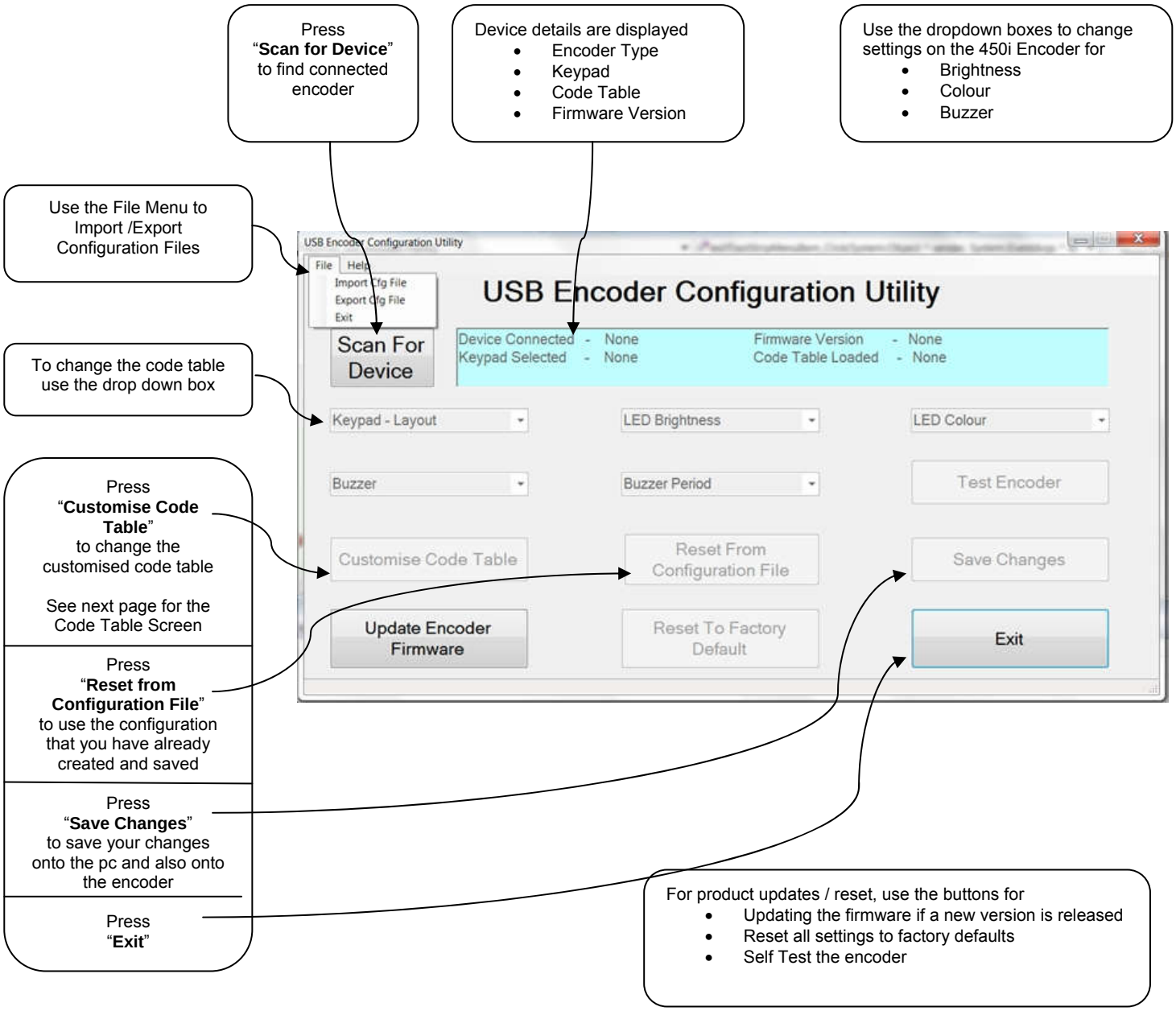

Configuration Utility User Guide

Customising the Code Table

The utility displays a screen that shows for each key

- Which USB code is assigned
- Which modifier (if any) is applied to the USB code.

Click on each position and select a USB code from the drop down list.

Add a modifier for each position if required.

Press "**Apply**" to reserve your changes. *This does not save the changes at this stage.*

Press "**Close**" to return to the home screen

"**Reset**" reloads the default code table

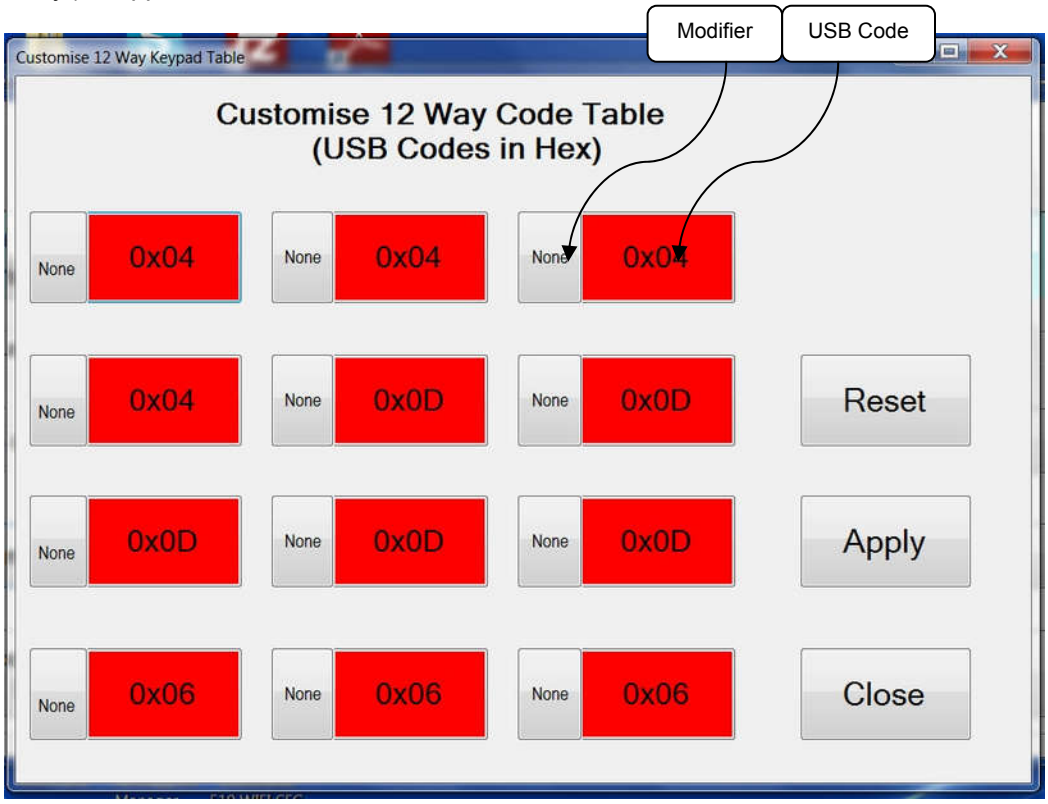

The full list of USB Codes is shown on the following pages.
USB Codes that have been checked in Word are shown in the relevant column, for example :

			Un-shifted	Shifted
Code	0x04	gives	a	A

Where the same USB code gives a different character dependent on the host language setting then this is shown in the relevant language column.

The actual function of the USB code is determined by the application; not all codes have a function in every application.

Full Code Table Reference

450 Series USB Encoder with Firmware Revision 8v02
Using Generic HID Keyboard Driver

When customising the code table on the encoder you can place a modifier in front of the USB Code

e.g. E1 , 34 will give you @

				Any Language differences (using Word)										
				English U.K. (if different to U.S.)		English U.S.					French	German	Spanish	
USB Usage ID (Dec)	**USB Usage ID (Hex)**	**Usage Name**	Note	Un-shifted	Shifted	Un-shifted		Shifted	Num lock					
00	00	Reserved (no event indicated)	9											
01	01	Keyboard Error Roll Over	9											
02	02	Keyboard POST Fail	9											
03	03	Keyboard Error Undefined	9											
04	04	Keyboard a and A	4			a		A						
05	05	Keyboard b and B				b		B						
06	06	Keyboard c and C	4			c		C						
07	07	Keyboard d and D				d		D						
08	08	Keyboard e and E				e		E						
09	09	Keyboard f and F				f		F						
10	0A	Keyboard g and G				g		G						
11	0B	Keyboard h and H				h		H						
12	0C	Keyboard i and I				i		I						
13	0D	Keyboard j and J				j		J						
14	0E	Keyboard k and K				k		K						
15	0F	Keyboard l and L				l		L						
16	10	Keyboard m and M	4			m		M						
17	11	Keyboard n and N				n		N						
18	12	Keyboard o and O	4			o		O						
19	13	Keyboard p and P	4			p		P						
20	14	Keyboard q and Q	4			q		Q						
21	15	Keyboard r and R				r		R						
22	16	Keyboard s and S	4			s		S						
23	17	Keyboard t and T				t		T						
24	18	Keyboard u and U				u		U						
25	19	Keyboard v and V				v		V						
26	1A	Keyboard w and W	4			w		W						
27	1B	Keyboard x and X	4			x		X						
28	1C	Keyboard y and Y	4			y		Y						
29	1D	Keyboard z and Z	4			z		Z						
30	1E	Keyboard 1 and !	4			1		!						
31	1F	Keyboard 2 and @	4	2	"	2		@						
32	20	Keyboard 3 and #	4	3	£	3		#						
33	21	Keyboard 4 and $	4			4		$						
34	22	Keyboard 5 and %	4			5		%						
35	23	Keyboard 6 and ^	4			6		^						
36	24	Keyboard 7 and &	4			7		&						
37	25	Keyboard 8 and *	4			8		*						
38	26	Keyboard 9 and (	4			9		(						

450 Series USB Encoder with Firmware Revision 8v02
Using Generic HID Keyboard Driver

When customising the code table on the encoder you can place a modifier in front of the USB Code

e.g. E1 , 34 will give you @

| | | | | Any Language differences (using Word) | | | |

450 Series USB Encoder with Firmware Revision 8v02
Using Generic HID Keyboard Driver

When customising the code table on the encoder you can place a modifier in front of the USB Code

e.g. E1 , 34 will give you @

				Any Language differences (using Word)					
				English U.K. (if different to U.S.)	English U.S.			French	German	Spanish
USB Usage ID (Dec)	**USB Usage ID (Hex)**	**Usage Name**	Note	Un-shifted / Shifted	Un-shifted	Shifted	Num lock			
77	4D	Keyboard End	1		End	Select to end				
78	4E	Keyboard PageDown	1		PgDn	Select to page down				
79	4F	Keyboard RightArrow	1		Goes right	Select to right				
80	50	Keyboard LeftArrow	1		Goes left	Select to left				
81	51	Keyboard DownArrow	1		Goes down	Select line down				
82	52	Keyboard UpArrow	1		Goes up	Select line up				
83	53	Keypad Num Lock and Clear	11		Toggles Numlock					
84	54	Keypad /	1		/					
85	55	Keypad *			*					
86	56	Keypad -			-					
87	57	Keypad +			+					
88	58	Keypad ENTER			Enter					
89	59	Keypad 1 and End			End		1			
90	5A	Keypad 2 and Down Arrow			Down arrow		2			
91	5B	Keypad 3 and PageDn			Page down		3			
92	5C	Keypad 4 and Left Arrow			Left arrow		4			
93	5D	Keypad 5					5			
94	5E	Keypad 6 and Right Arrow			Right arrow		6			
95	5F	Keypad 7 and Home			Home		7			
96	60	Keypad 8 and Up Arrow			Up arrow		8			
97	61	Keypad 9 and PageUp			Page up		9			
98	62	Keypad 0 and Insert					0			
99	63	Keypad . and Delete			.		.			
100	64	Keyboard Non-US \ and |	3,6		\	|				
101	65	Keyboard Application	12							
102	66	Keyboard Power	9							
103	67	Keypad =			= on Mac O/S only					
104	68	Keyboard F13								
105	69	Keyboard F14								
106	6A	Keyboard F15								
107	6B	Keyboard F16								
108	6C	Keyboard F17								
109	6D	Keyboard F18								
110	6E	Keyboard F19								
111	6F	Keyboard F20								

450 Series USB Encoder with Firmware Revision 8v02
Using Generic HID Keyboard Driver

When customising the code table on the encoder you can place a modifier in front of the USB Code

e.g. E1 , 34 will give you @

				Any Language differences (using Word)								
				English U.K. (if different to U.S.)	English U.S.				French		German	Spanish
USB Usage ID (Dec)	**USB Usage ID (Hex)**	**Usage Name**	Note	Un-shifted	Shifted	Un-shifted		Shifted	Num lock			
112	70	Keyboard F21										
113	71	Keyboard F22										
114	72	Keyboard F23										
115	73	Keyboard F24										
116	74	Keyboard Execute										
117	75	Keyboard Help										
118	76	Keyboard Menu										
119	77	Keyboard Select										
120	78	Keyboard Stop										
121	79	Keyboard Again										
122	7A	Keyboard Undo										
123	7B	Keyboard Cut										
124	7C	Keyboard Copy										
125	7D	Keyboard Paste										
126	7E	Keyboard Find										
127	7F	Keyboard Mute										
128	80	Keyboard Volume Up										
129	81	Keyboard Volume Down										
130	82	Keyboard Locking Caps Lock	12									
131	83	Keyboard Locking Num Lock	12									
132	84	Keyboard Locking Scroll Lock	12									
133	85	Keypad Comma	27									
134	86	Keypad Equal Sign	29									
135	87	Keyboard International115										
136	88	Keyboard International216										
137	89	Keyboard International317										
138	8A	Keyboard International418										
139	8B	Keyboard International519										
140	8C	Keyboard International620										
141	8D	Keyboard International721										
142	8E	Keyboard International822										
143	8F	Keyboard International922										

450 Series USB Encoder with Firmware Revision 8v02
Using Generic HID Keyboard Driver

When customising the code table on the encoder you can place a modifier in front of the USB Code

e.g. E1 , 34 will give you @

				Any Language differences (using Word)						
				English U.K. (if different to U.S.)	English U.S.					
									French	German	Spanish
USB Usage ID (Dec)	**USB Usage ID (Hex)**	**Usage Name**	Note	Un-shifted	Shifted	Un-shifted		Shifted	Num lock			
144	90	Keyboard LANG125										
145	91	Keyboard LANG226										
146	92	Keyboard LANG330										
147	93	Keyboard LANG431										
148	94	Keyboard LANG532										
149	95	Keyboard LANG68										
150	96	Keyboard LANG78										
151	97	Keyboard LANG88										
152	98	Keyboard LANG98										
153	99	Keyboard Alternate Erase7										
154	9A	Keyboard SysReq/Attention1										
155	9B	Keyboard Cancel										
156	9C	Keyboard Clear										
157	9D	Keyboard Prior										
158	9E	Keyboard Return										
159	9F	Keyboard Separator										
160	A0	Keyboard Out										
161	A1	Keyboard Oper										
162	A2	Keyboard Clear/Again										
163	A3	Keyboard CrSel/Props										
164	A4	Keyboard ExSel										
224	E0	Keyboard LeftControl										
225	E1	Keyboard LeftShift										
226	E2	Keyboard LeftAlt										
227	E3	Keyboard Left GUI	10,23									
228	E4	Keyboard RightControl										
229	E5	Keyboard RightShift										
230	E6	Keyboard RightAlt										
231	E7	Keyboard Right GUI	10.24									

Notes on the Code Tables 1-15, 20-34

1 Usage of keys is not modified by the state of the Control, Alt, Shift or Num Lock keys. That is, a key does not send extra codes to compensate for the state of any Control, Alt, Shift or Num Lock keys.

2 Typical language mappings: US: \| Belg: ƒÊ`’ FrCa: <}> Dan:f* Dutch: <> Fren:*ƒÊ Ger: #f Ital: u˜ LatAm: }`] Nor:,* Span: }C Swed: ,* Swiss: $’ UK: #~.

3 Typical language mappings: Belg:<\> FrCa:á‹â Dan:<\> Dutch:]|[Fren:<> Ger:<|> Ital:<> LatAm:<> Nor:<> Span:<> Swed:<|> Swiss:<\> UK:\| Brazil: \|.

4 Typically remapped for other languages in the host system.

5 Keyboard Enter and Keypad Enter generate different Usage codes.

6 Typically near the Left-Shift key in AT-102 implementations.

7 Example, Erase-Eaze. key.

8 Reserved for language-specific functions, such as Front End Processors and Input Method Editors.

9 Reserved for typical keyboard status or keyboard errors. Sent as a member of the keyboard array. Not a physical key.

10 Windows key for Windows 95, and gCompose.h

11 Implemented as a non-locking key; sent as member of an array.

12 Implemented as a locking key; sent as a toggle button. Available for legacy support; however, most systems should use the non-locking version of this key.

13 Backs up the cursor one position, deleting a character as it goes.

14 Deletes one character without changing position.

15-20 See additional foot notes in the USB spec

21 Toggle double-byte/single-byte mode

22 Undefined, available for other front end language processors

23 Windowing environment key, examples are Microsoft left win key, mac left apple key, sun left meta key

24 Windowing environment key, example are microdoft wight win key, macintosh right apple key, sun right meta key

Product Dimensions

Overall dims	77mm x 39mm x 25mm, 30 grams
Packed dims	1065mm x 60mm x 46mm, 40 grams
Included parts	Qty 4 sticky pads, Installation sheet

Cables

Depending on your installation you may require either a straight or an angled cable, with latching mini B USB connector. If you use an angled cable then you will be able to secure the cable to the encoder as below.



Encoder on 4 way keypad
With Startech cable USB2HABM3RA



Encoder on 12 way keypad
Startech USB2HABM3LA
(order pn 4500-01 from Storm)

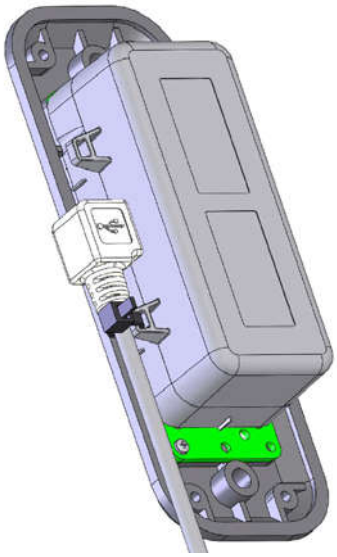

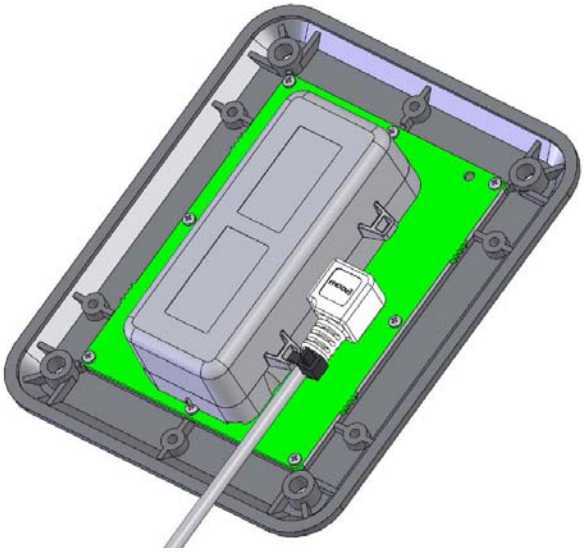

If you wish to have the encoder remote from the keypad then you will need an interconnection cable as below

Encoder 4 W	to	4 w keypad	Illuminated version
PIN		PIN	PIN
1			1
2		1	2
3		2	3
4		3	4
5		4	5
6		5	6
7			7

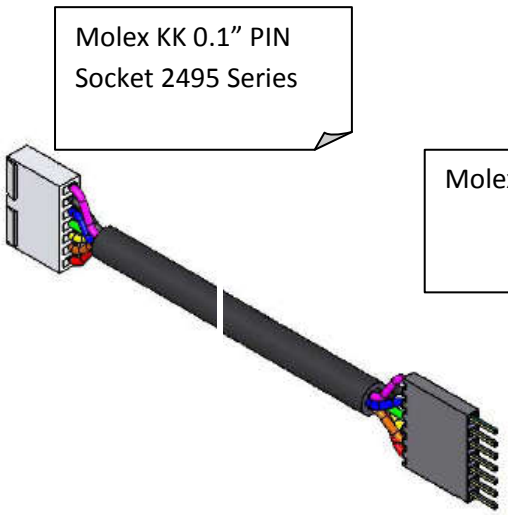

Encoder 12/16	to	12/16 keypad	Illuminated version
PIN		PIN	PIN
1			1
2		1	2
3		2	3
4		3	4
5		4	5
6		5	6
7		6	7
8		7	8
9		8	9
10			10

Panel Cutout Drawings

Surface Fixing of Keypads : 700 Series. 720 Series Both products use the same panel cutout detail.

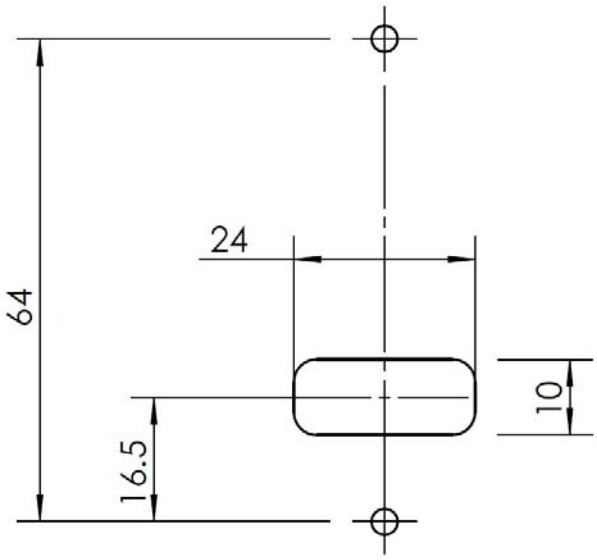

4 WAY PANEL FRONT MOUNTED

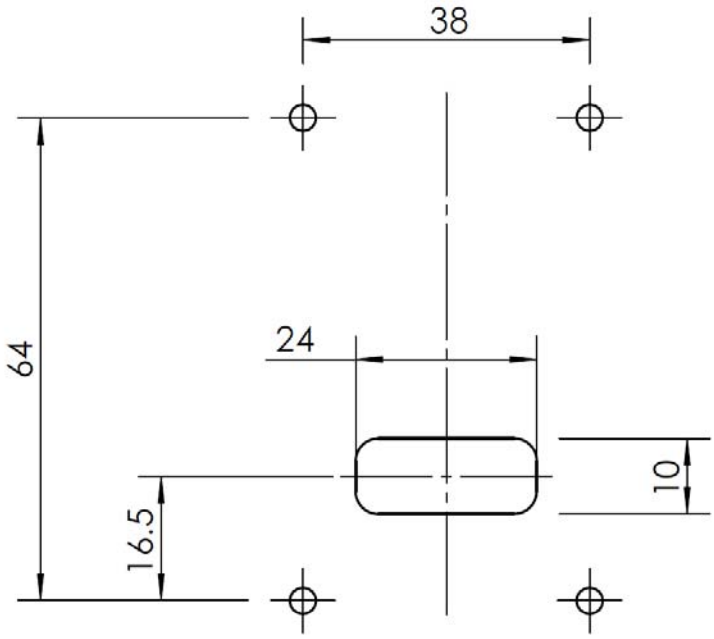

12 WAY PANEL FRONT MOUNTED

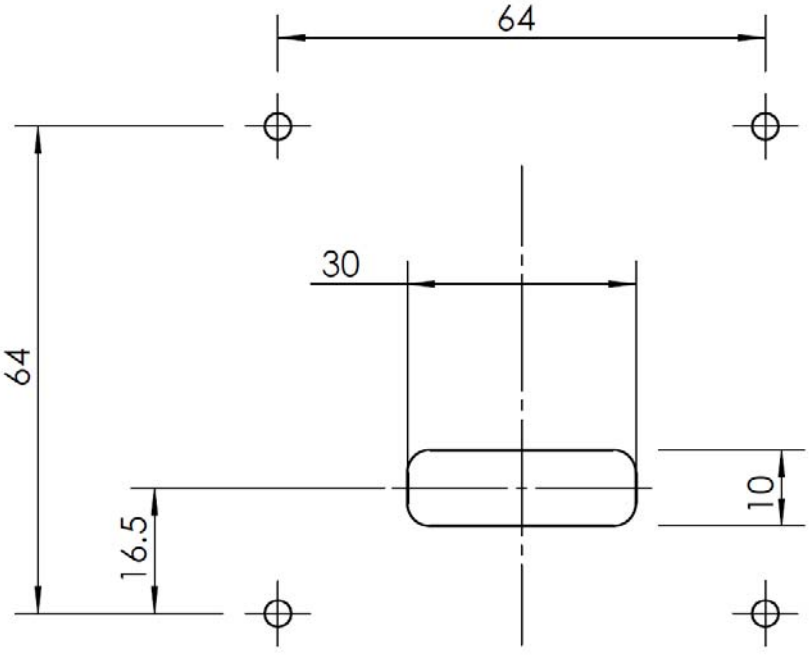

16 WAY PANEL FRONT MOUNTED

PANEL DETAILS FOR
700 AND 720 SERIES
FRONT FIXING

ALL DIMS IN MM
R3 IN CORNERS

CLEARANCE HOLES
DIAMETER 3.5 FOR STUDS

Panel Cutout Drawings

Underpanel Fixing of Keypads : 700 Series. (4 way uses fix kit 7004CL0, 12/16 way uses fix kit 7012CL0)
720 Series (uses fixing kit pn 7204CL0, 12/16 way uses fix kit 7212CL0)

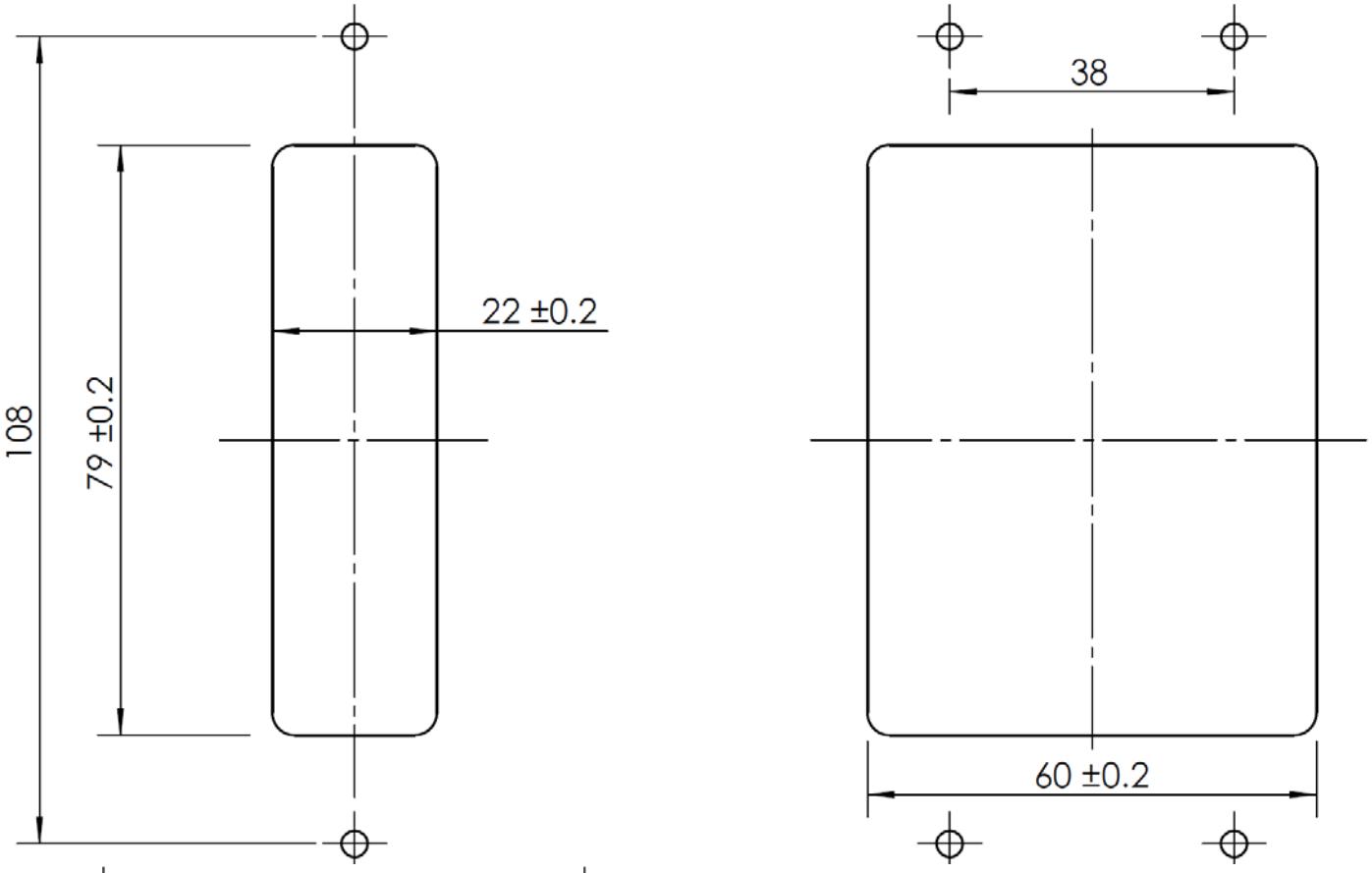

PANEL DETAILS FOR
700 AND 720 SERIES
UNDERPANEL FIXING

4, 12 AND 16 WAY
KEYPADS
MAKE SURE TO USE THE
CORRECT FIXING CLIPS
FOR PRODUCT

ALL DIMS IN MM
R3 IN CORNERS
M3 STUDS OR SIMILAR

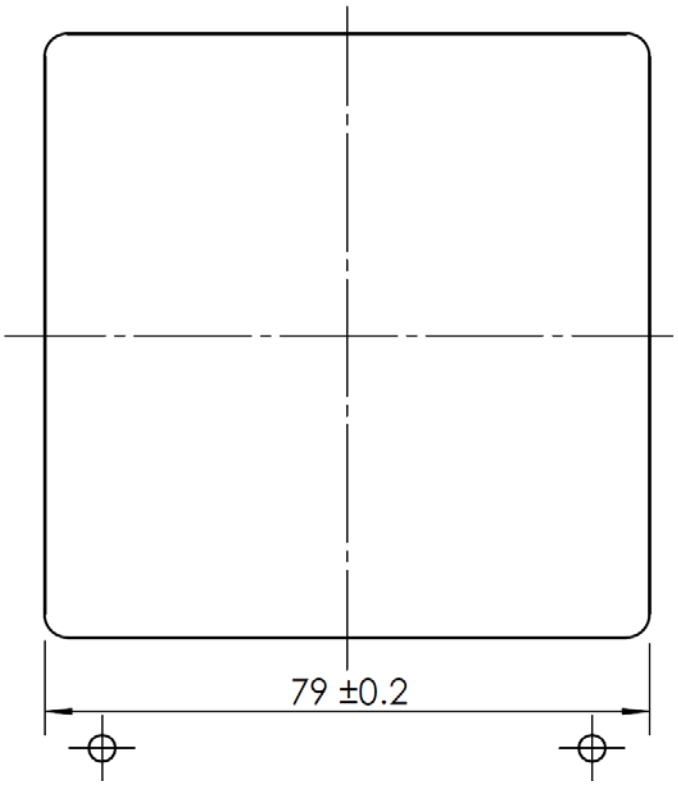

Panel Cutout Drawings

Surface Fixing of Keypads : 1000 Series, 2000 Series, PLX Series

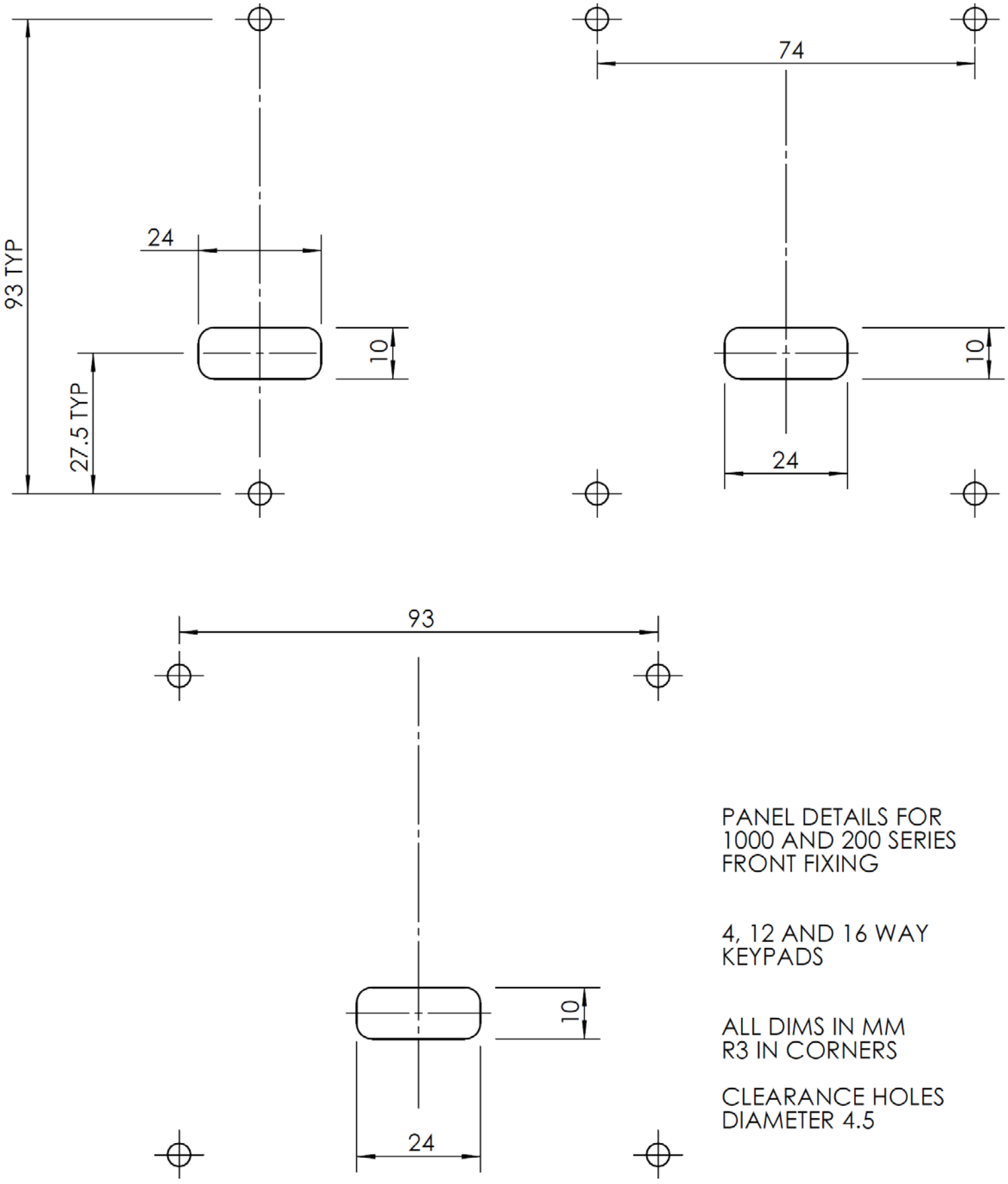

Panel Cutout Drawings

Underpanel Fixing of Keypads : 1000 Series, 2000 Series, PLX Series. Use M3 CD weld studs or similar

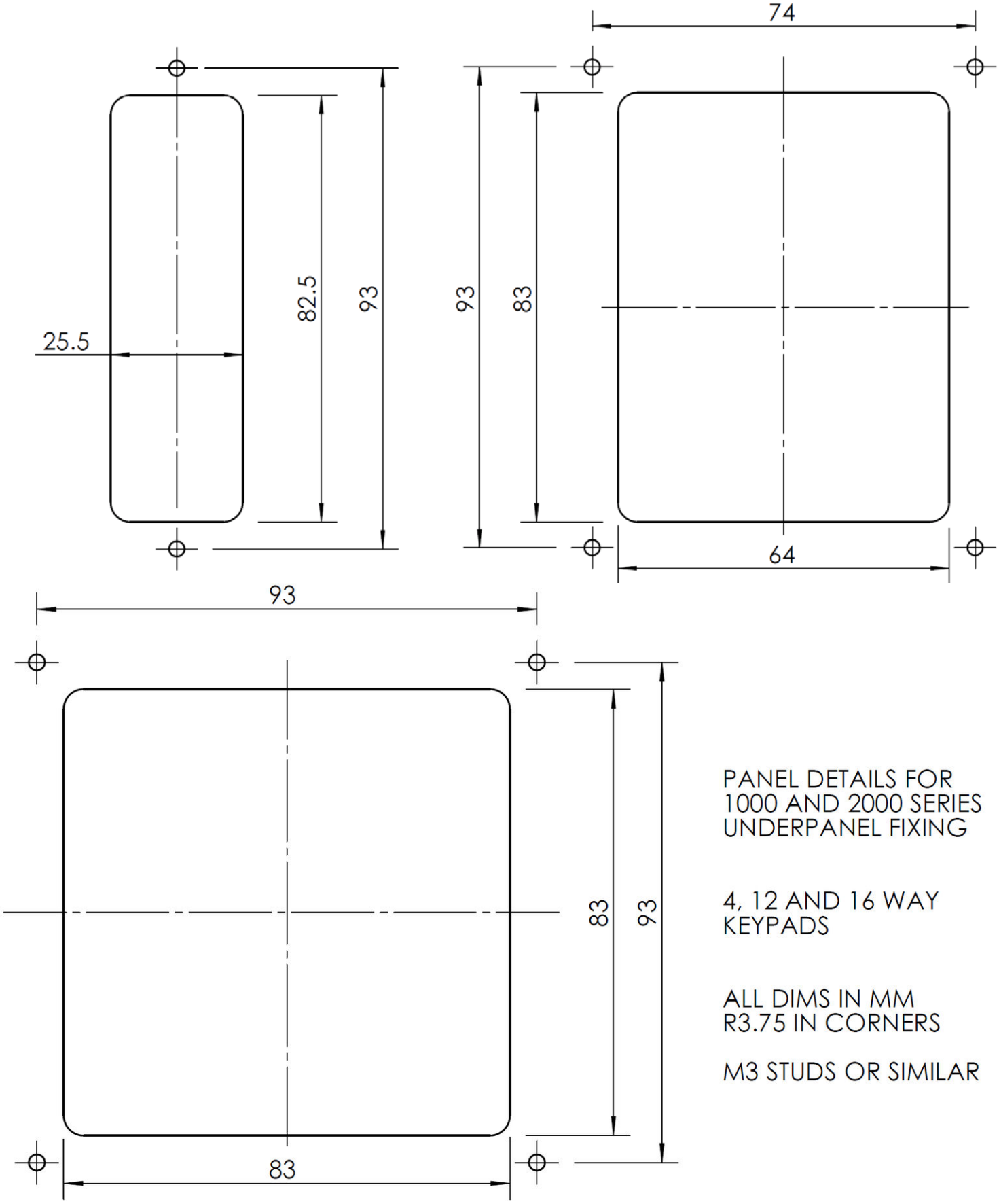

PANEL DETAILS FOR
1000 AND 2000 SERIES
UNDERPANEL FIXING

4, 12 AND 16 WAY
KEYPADS

ALL DIMS IN MM
R3.75 IN CORNERS

M3 STUDS OR SIMILAR

Panel Cutout Drawings

Surface Fixing of Keypads : 3000 Series, GFX Series, 3000 Illuminator, GFX Illuminator

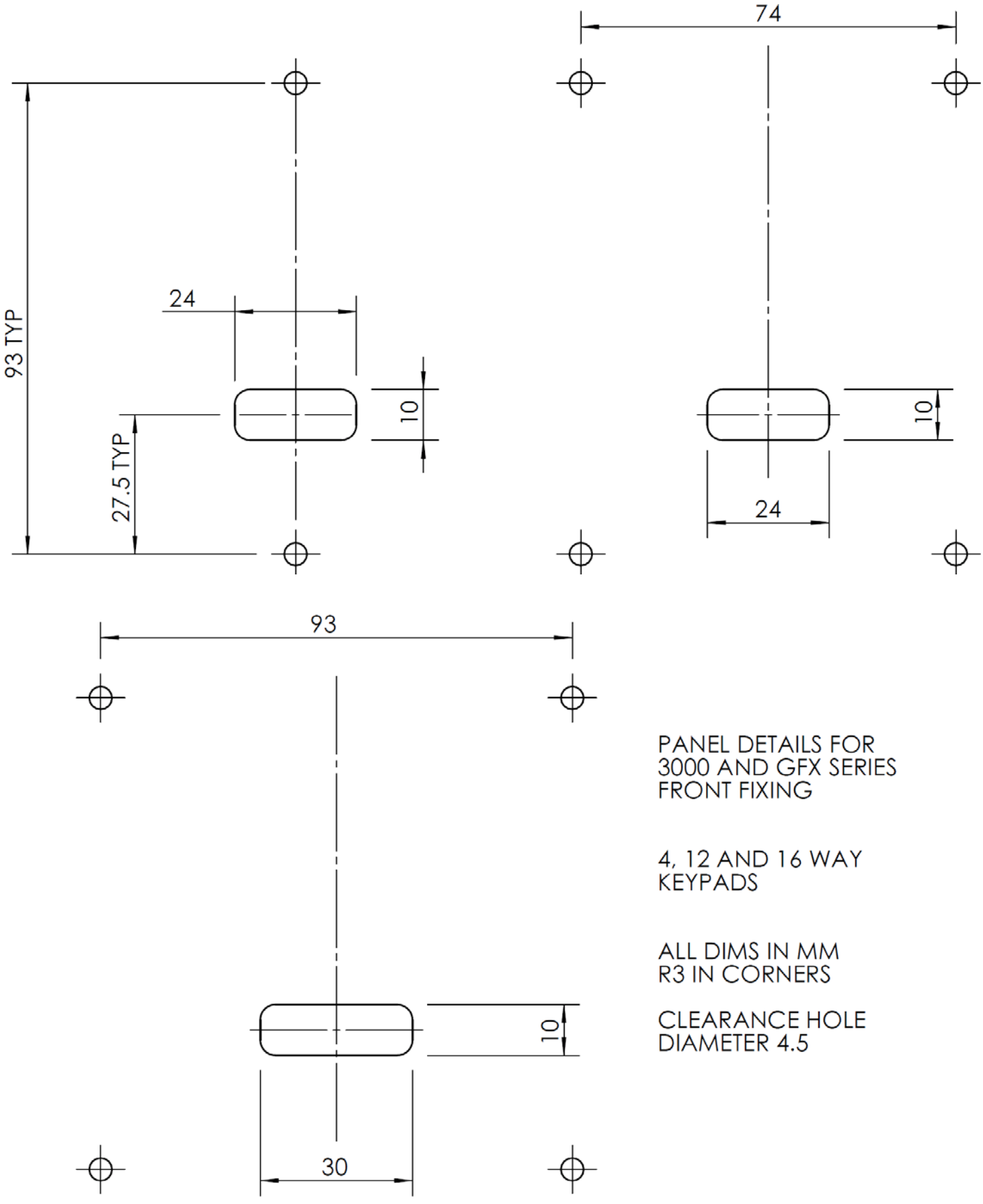

Panel Cutout Drawings

Underpanel Fixing of Keypads : 3000 Series, GFX Series, 3000 Illuminator, GFX Illuminator

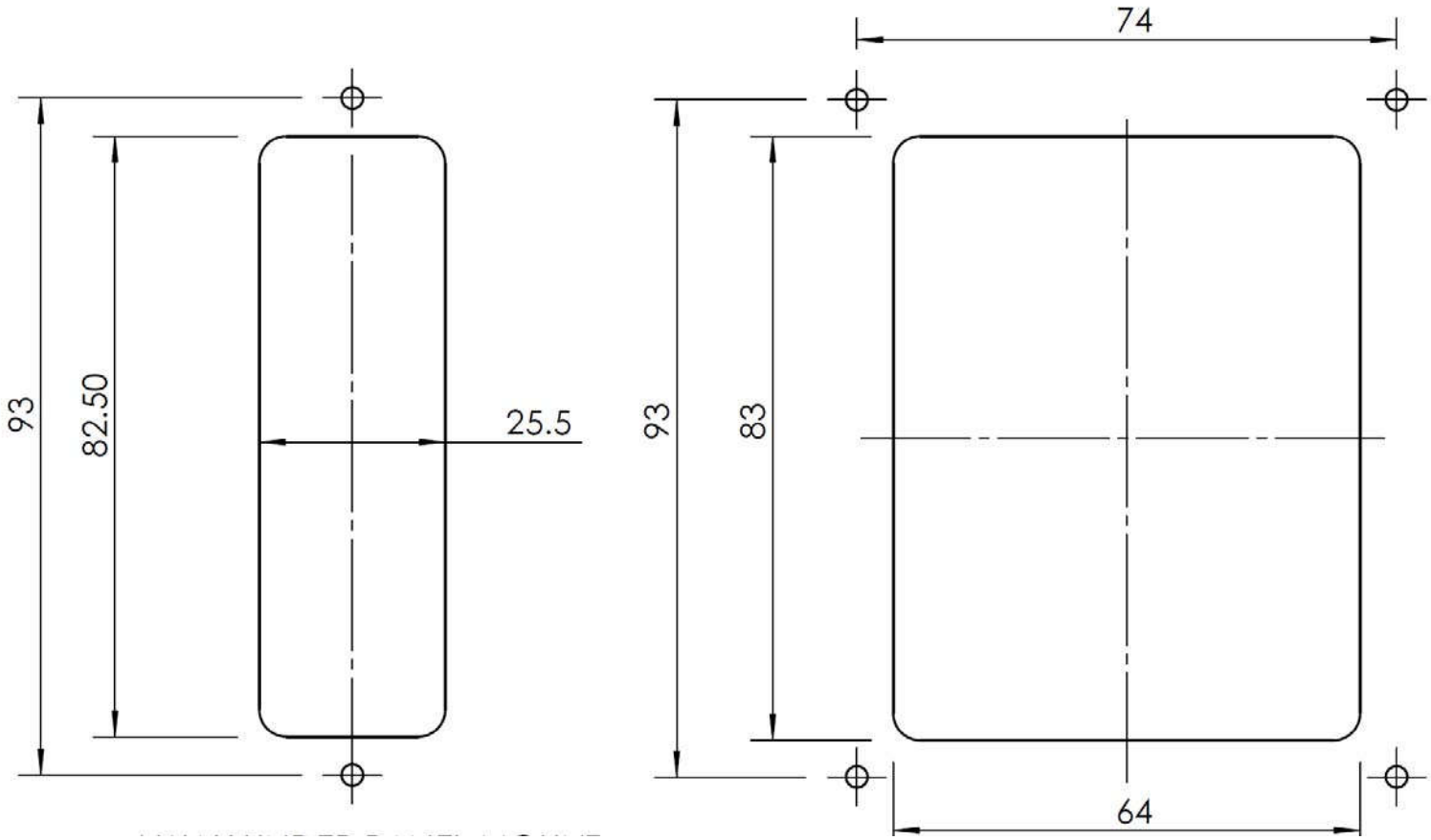

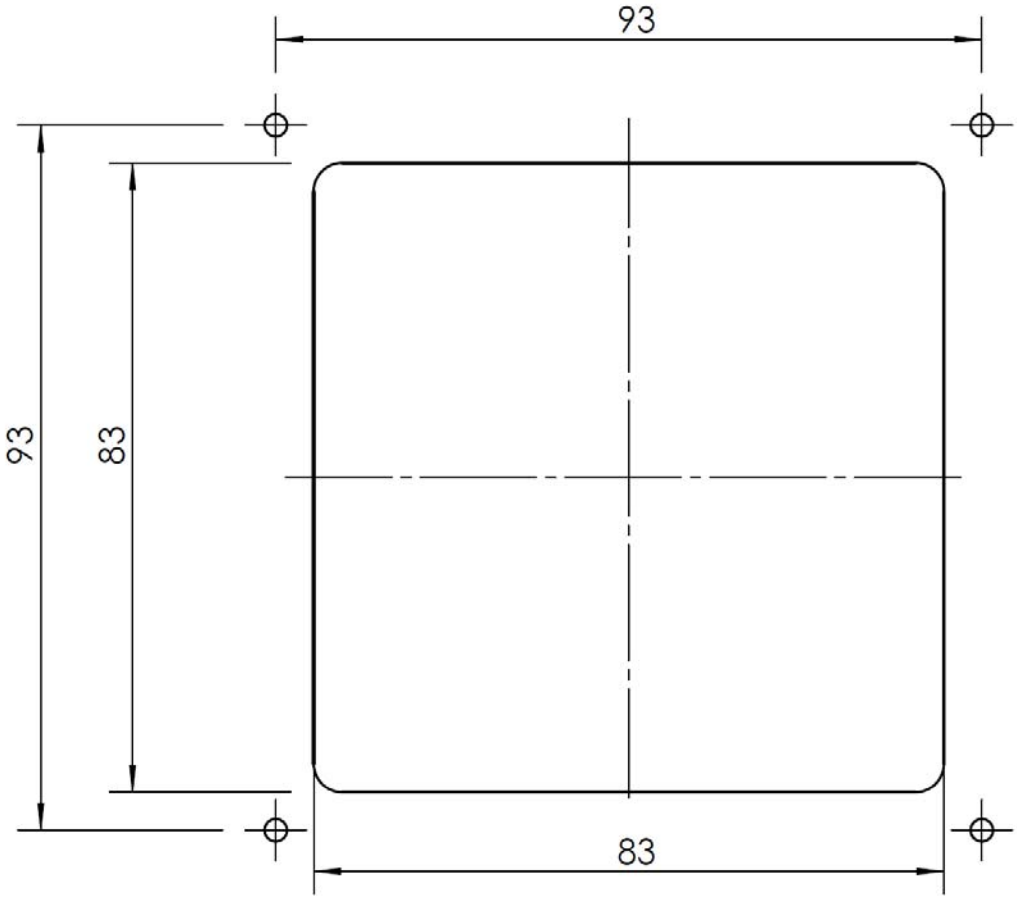

PANEL DETAILS FOR
3000 AND GFX SERIES
UNDERPANEL FIXING

4, 12 AND 16 WAY
KEYPADS

ALL DIMS IN MM
R3.75 IN CORNERS

M3 STUDS OR SIMILAR

Copyright Notice

This document is provided for use and guidance of engineering personnel engaged in the installation or application of Storm Interface data entry products manufactured by Keymat Technology Ltd. Please be advised that all information, data and illustrations contained within this document remain the exclusive property of Keymat Technology Ltd. and are provided for the express and exclusive use as described above.

This document is not supported by Keymat Technology's engineering change note, revision or reissue system. Data contained within this document is subject to periodic revision, reissue or withdrawal. Whilst every effort is made to ensure the information, data and illustrations are correct at the time of publication, Keymat Technology Ltd. are not responsible for any errors or omissions contained within this document.

No part of this document may be reproduced in any form or by any means or used to make any derivative work (such as translation or adaptation) without written permission from Keymat Technology Ltd.

For more information about Storm Interface and its products, please visit our website at www.storm-interface.com © Copyright Storm Interface. 2013 All rights reserved

==========

Copyright Acknowledgement

This product uses binary format of the hidapi dll, Copyright (c) 2010, Alan Ott, Signal 11 Software. All rights reserved.

THIS SOFTWARE IS PROVIDED BY THE COPYRIGHT HOLDERS AND CONTRIBUTORS "AS IS" AND ANY EXPRESS OR IMPLIED WARRANTIES, INCLUDING, BUT NOT LIMITED TO, THE IMPLIED WARRANTIES OF MERCHANTABILITY AND FITNESS FOR A PARTICULAR PURPOSE ARE DISCLAIMED. IN NO EVENT SHALL THE COPYRIGHT HOLDER OR CONTRIBUTORS BE LIABLE FOR ANY DIRECT, INDIRECT, INCIDENTAL, SPECIAL, EXEMPLARY, OR CONSEQUENTIAL DAMAGES (INCLUDING, BUT NOT LIMITED TO, PROCUREMENT OF SUBSTITUTE GOODS OR SERVICES; LOSS OF USE, DATA, OR PROFITS; OR BUSINESS INTERRUPTION) HOWEVER CAUSED AND ON ANY THEORY OF LIABILITY, WHETHER IN CONTRACT, STRICT LIABILITY, OR TORT (INCLUDING NEGLIGENCE OR OTHERWISE) ARISING IN ANY WAY OUT OF THE USE OF THIS SOFTWARE, EVEN IF ADVISED OF THE POSSIBILITY OF SUCH DAMAGE.

Change History

USB Configuration Utility	Date	Version	Details
4500-SW01	1 Aug 13	2.1	First Release
	20 Aug 13	3.0	Increased size of modifier button + Increased size of Select Code Combo box.

USB Encoder Software	Date	Version	Details
	1 Aug 13	8v02	First Release
	20 Aug 13	8v03	Disable USB stack serialisation

Engineering Manual	Date	Version	Details
	1 Aug 13	1.0	First Release
	12 Aug 13	1.02	p7 Alternative Code table : Outputs with Numlock clarified. Also changed in French version p11-14. Checked some USB codes in the full tables. Removed Insulation Breakdown spec (error)

This page intentionally left blank