

Single-Ended Cordsets
Single Keyway M12

#24 AWG black PUR cable
Oil- and abrasion-resistant polyurethane jacket
High-density pin count in standard M12 quick-disconnect

NEW	8P	
	FEMALE	MALE
FACE VIEW	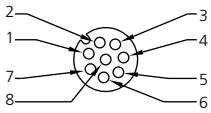	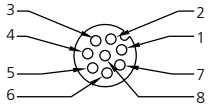
COLOR CODE	1- white 2- brown 3- green 4- yellow 5- gray 6- pink 7- blue 8- red	
VOLTAGE	30V AC / 36V DC	
CURRENT	4A	
CONDUCTOR	#24-8	

FEMALE	FIG	SINGLE-ENDED CORDSETS WITH #24 AWG PUR CABLE 2 METERS
STRAIGHT	1	808000P02M020
90°	2	808001P02M020
MATING RECEPTACLE	4	8R8J36E03C3003
MALE	**FIG**	**SINGLE-ENDED CORDSETS WITH #24 AWG PUR CABLE 2 METERS**
STRAIGHT	3	808006P02M020
MATING RECEPTACLE	5	8R8J30E03C3003

CATALOG OPTIONS

Use the following chart to modify your part's specifications

808000P02M020

CABLE LENGTH

4 METER	040
5 METER	050

BRADHARRISON® From Woodhead Connectivity

Specifications

MECHANICAL	
CONNECTOR FACE:	POLYAMIDE (NYLON)
MOLDED BODY:	PVC
O-RING:	VITON
COUPLING NUT:	ZINC DIECAST W/ BLACK EPOXY COAT
CABLE:	BLACK #24 AWG POLYURETHANE JACKET AND PVC CONDUCTOR INSULATION, 300V
OUTSIDE DIAMETER:	8P - .29" (7.4mm)
ELECTRICAL	
VOLTAGE RATING:	30V AC; 36V DC
AMPERAGE:	8P - 4A
ENVIRONMENTAL	
PROTECTION:	IP 68, NEMA 6P
AMBIENT OPERATING TEMP:	-4° TO 185° F (-20° TO 85°C)

CONNECTOR DIMENSIONS

FEMALE STRAIGHT

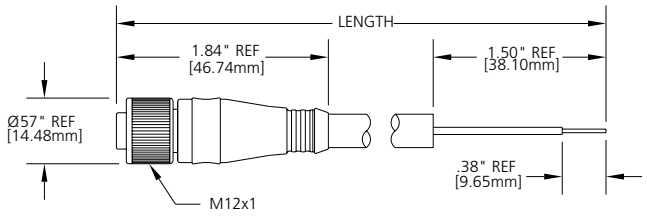

FIG 1

FEMALE 90°

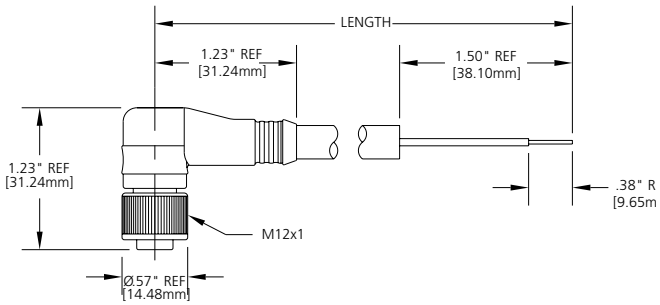

FIG 2

MALE STRAIGHT

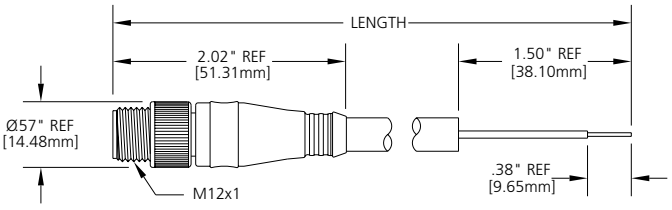

FIG 3

RECEPTACLE DIMENSIONS

MALE RECEPTACLE W/ EXTERNAL THREADS AND PG9 THREADS

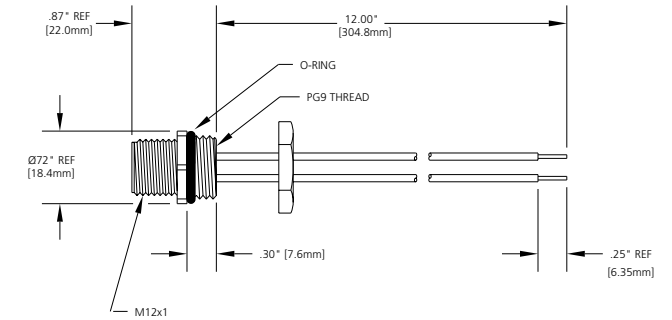

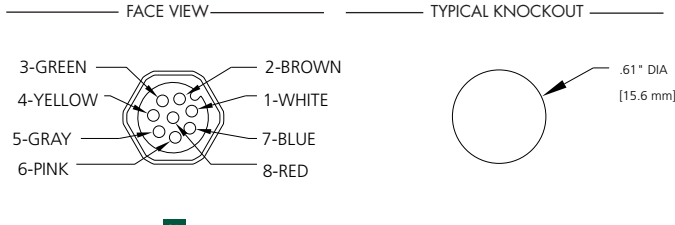

8P

FIG 4

FEMALE RECEPTACLE W/ INTERNAL THREADS AND PG9 THREADS

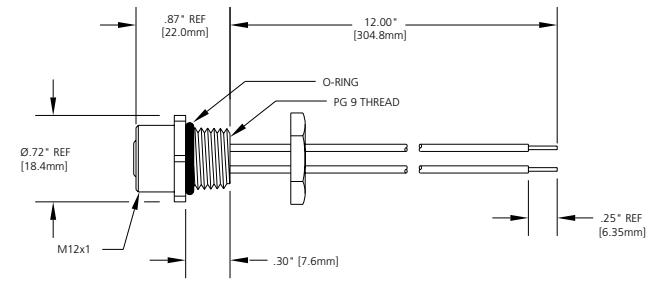

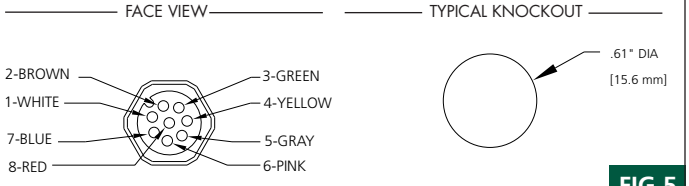

FIG 5