Pressure regulator, Series AS2-RGS-...-DS

2024-03-19

R412006125

Series AS2

The AVENTICS Series AS2 is a modular, versatile maintenance unit for universal application. This Series offers compact dimensions, is highly efficient, lightweight and easy-to-use. The AVENTICS Series AS guarantees reliability, safety, and efficiency with a simplified assembly and maintenance efforts.



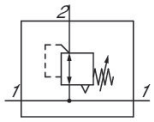

Technical data

Industry	Industrial
Function	Standard pressure regulator
Parts	Pressure regulator with continuous pressure supply
Mounting orientation	Any
Regulator type	Diaphragm-type pressure regulator
Port	G 1/4
Nominal flow Qn	2200 l/min
Min. regulation range	0.1 bar
Max. regulation range	2 bar
Min. working pressure	0.1 bar
Max. working pressure	16 bar
Min. ambient temperature	-10 °C
Max. ambient temperature	50 °C
Activation	Mechanical
Regulator function	with relieving air exhaust
Regulator type	Can be assembled into blocks
Pressure supply	double
Lock type	for padlocks
with continuous pressure supply	with continuous pressure supply

Max. pressure gauge Ø in blocked state	50 mm
Medium	Compressed air Neutral gases
Weight	0.248 kg

Material

Housing material	Polyamide
Material front plate	Acrylonitrile butadiene styrene
Seal material	Acrylonitrile butadiene rubber
Material threaded bushing	Die cast zinc
Part No.	R412006125

Technical information

The pressure dew point must be at least 15 °C less than ambient and medium temperature and may not exceed 3 °C.

The rear pressure gauge connection on the pressure regulator is closed with a blanking plug, the front connection is open. Depending on the customer application, a second blanking plug may be necessary. Please order separately (see accessories).

Nominal flow Qn with secondary pressure p2 = 6 bar at Δp = 1 bar

Relieving exhaust (≤ 0.3 bar over set pressure)

With rear exhaust (>3 bar)

Order pressure gauge separately

Dimensions in mm

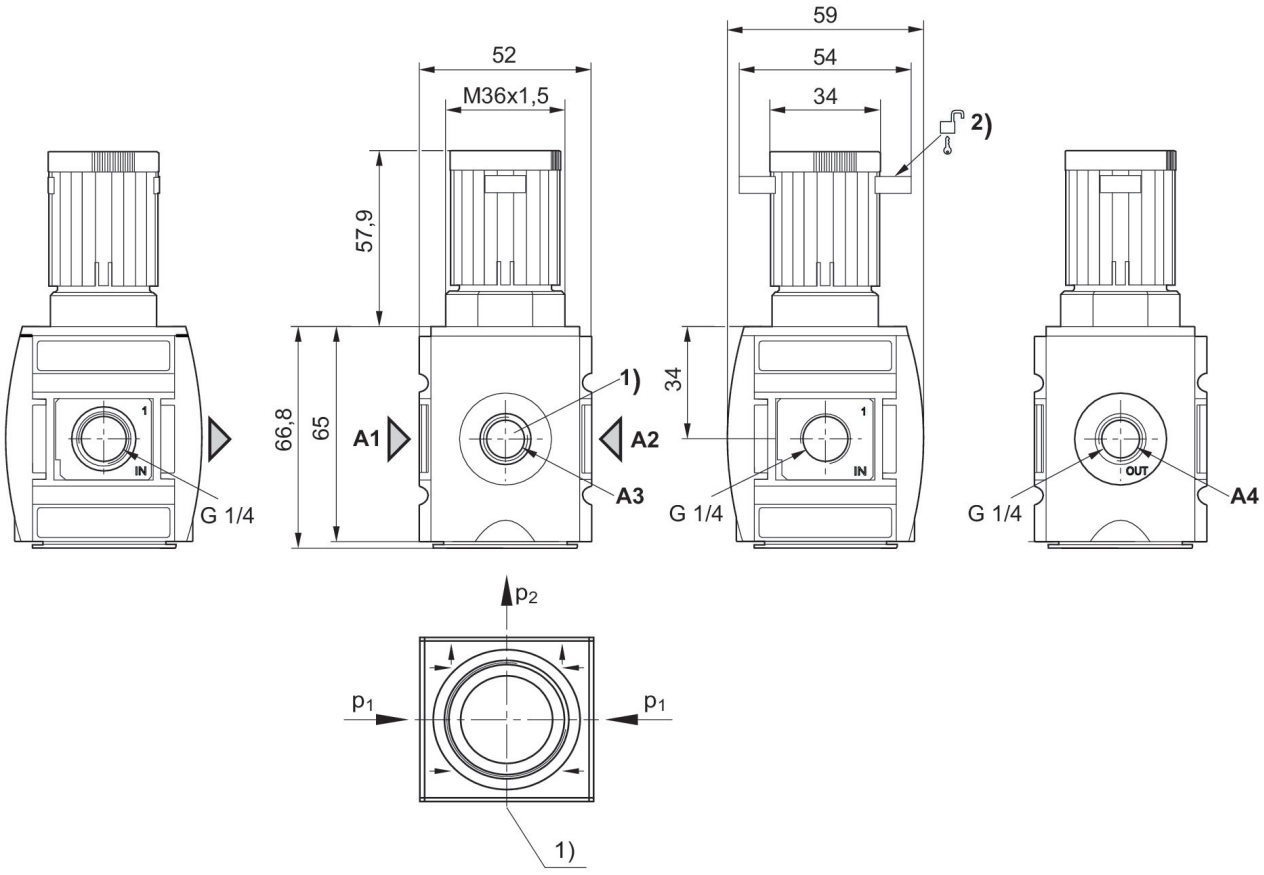

A1 = input
A2 = output
A3 = pressure gauge connection
A4 = output
1) Pressure gauge connection
2) Mounting option for padlocks, max. shackle Ø 8

Pressure characteristics curve

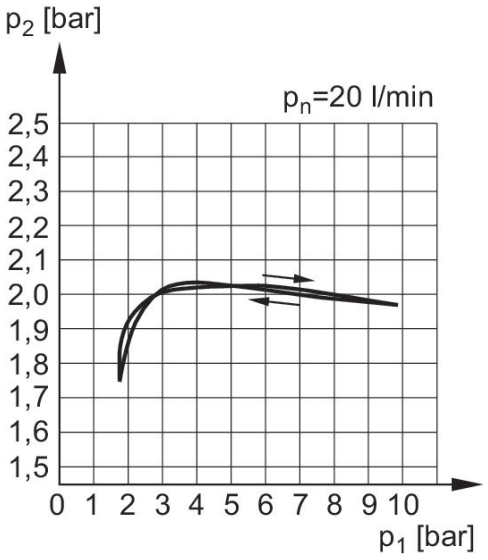

p1 = Working pressure
p2 = Secondary pressure
qn = Nominal flow

Flow rate characteristic p2: 0,5 - 10 bar

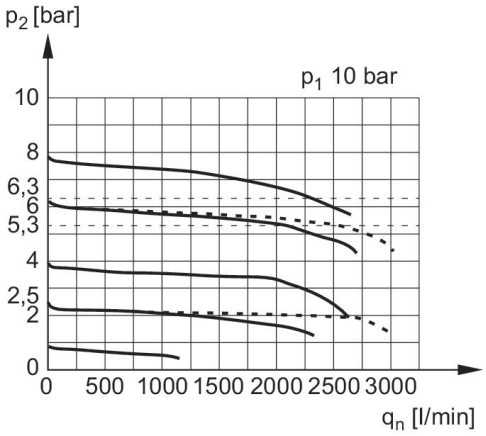

p1 = Working pressure
p2 = Secondary pressure
qn = Nominal flow

Application example

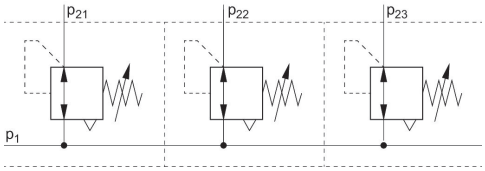

p1 = Working pressure

Pressure regulator, Series AS2-RGS-...-DS

2024-03-19

R412006125

Accessories overview

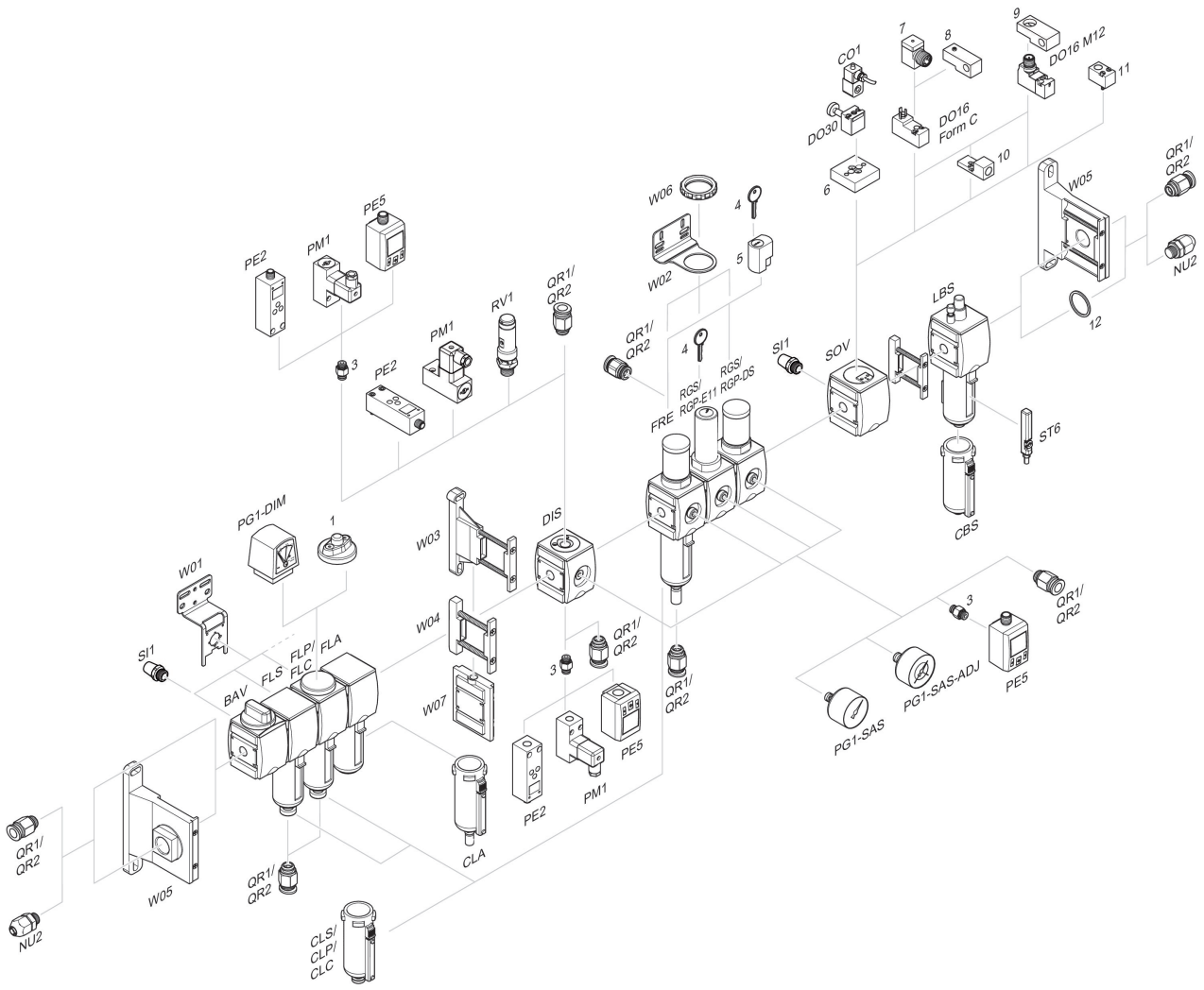

1 = contamination display 3 = Double nipple 4 = Key for E11 locking 5 = mortise lock 6 = Transition plate DO30 7 = Adapter, Series CON-VP 8 = Mounting aid DO16, form C 9 = Mounting aid DO16, M12 10 = Adapter for external pilot air 11 = Adapter pneumatic operation 12 = Sealing ring