SN2301

Control monitor for flow sensors

VS2000/230VAC/EXI/1G

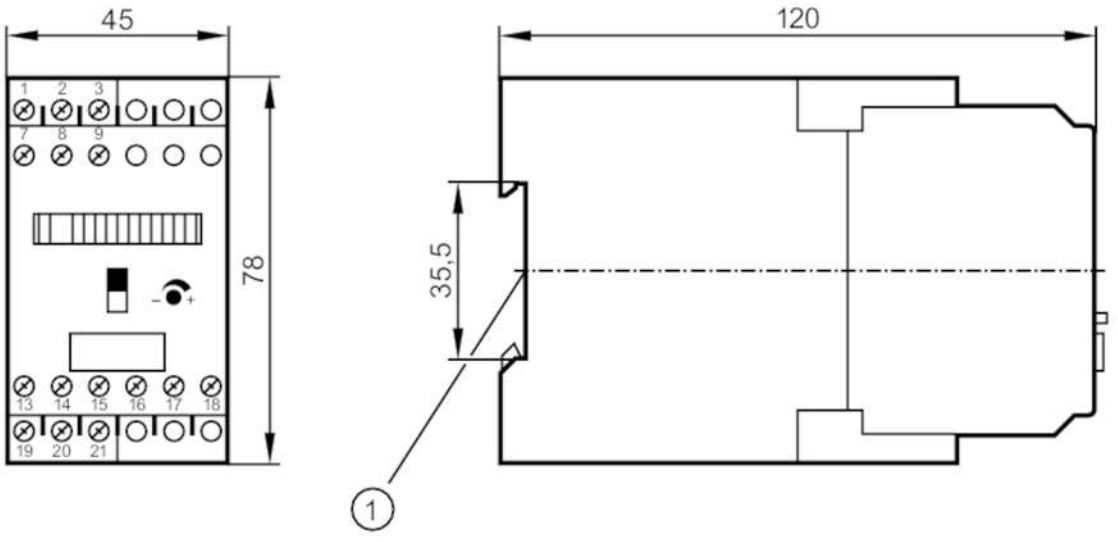

1 mounting on DIN rail

Application		
Application		Flow monitoring; Wire monitoring
Electrical data		
Frequency AC	[Hz]	47...63
Operating voltage tolerance	[%]	-10...10
Operating voltage	[V]	< 230 AC
Max. power consumption	[VA]	5
Reverse polarity protection		no
Power-on delay time	[s]	30
Number of channels		1
Outputs		
Electrical design		relay
Contact rating		4 A (250 V AC cos phi > 0,7) ; 0,2 A (250 V DC); 4 A (24 V DC)
Switching function flow monitoring		relay energised when flow is present
Switching function wire break monitoring		relay de-energised in case of wire break
Short-circuit proof		no
Overload protection		no
Software / programming		
Adjustment of the switch point		potentiometer
Selection liquids / gases		slide switch
Operating conditions		
Ambient temperature	[°C]	-20...60
Storage temperature	[°C]	-20...85

SN2301

Control monitor for flow sensors

VS2000/230VAC/EXI/1G

Protection			IP 40
Protection rating terminals			IP 20
Tests / approvals			
Approval			PTB 01 ATEX 2075; IECEx PTB 07.0004; TIIS TC16593
ATEX marking			II (1) G [Ex ia Ga] IIC
MTTF	[years]		248
Mechanical data			
Weight	[g]		504.5
Housing			housing for DIN rail mounting
Dimensions	[mm]		78 x 45 x 120
Materials			plastics
Displays / operating elements			
Display		function	11 x LED
		switching status	LED, red
Electrical connection			
Required protection			miniature fuse to IEC60127-2 sheet 1; ≤ 5 A; fast acting; Place the fuse outside the hazardous area.
Remarks			
Remarks			Caution The control monitor must be mounted outside the hazardous area.
			Recommendation Check the safe functioning of the unit after a short circuit.
Pack quantity			1 pcs.

SN2301

Control monitor for flow sensors

VS2000/230VAC/EXI/1G

Electrical connection

terminals: 15 x ...2.5 mm²

Connection

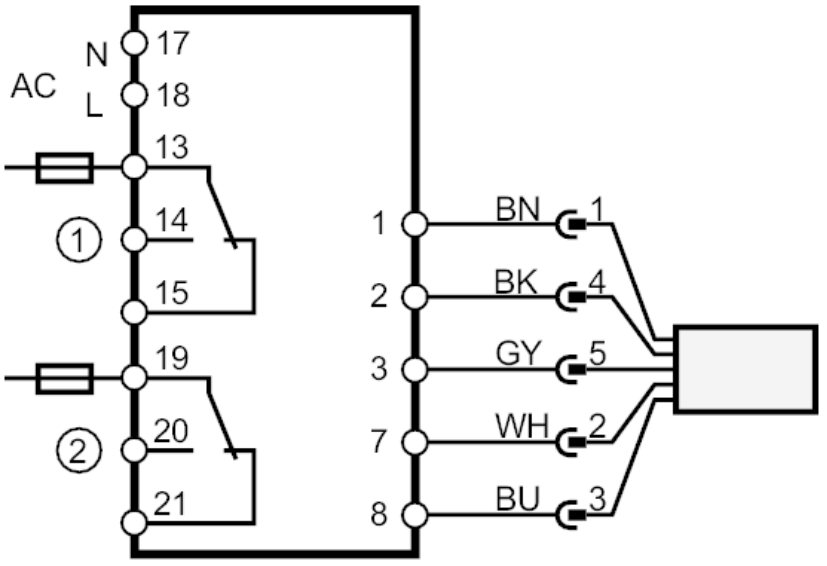

1	Flow monitoring
2	Wire monitoring
Note	miniature fuse to IEC60127-2 sheet 1 ≤ 5 A fast acting Place the fuse outside the hazardous area. Core colours :
BN =	brown
BU =	blue
BK =	black
WH =	white
GY =	grey

Other data

Maximum values for control circuit

in protection rating intrinsic safety	[EEx ia] IIC	[EEx ia] IIB	[EEx ib] IIC	[EEx ib] IIB
Voltage [V]	15.8	15.8	15.8	15.8
Current [mA]	92	92	92	92
Power [mW]	680	680	680	680
External inductance [mH]	1	1	1	1
External capacitance [µF]	0.185	1.6	0.185	1.6