Your Expert Partner for **Human Machine Interfaces**

Actuator

Distribution by
Rs-online

14-
810.918



https://rs-online.eao.com/component/14-810.91...

Your product:



14-810.918
Actuator

FRONT

Front dimension:	Ø 35 mm
Front form:	Round
Front bezel colour:	Nature
Front bezel material:	Aluminium

MOUNTING

Design:	Flush
Mounting cut-out:	Ø 30.5 mm
Mounting type:	Panel mounting

ELECTRICAL CHARACTERISTICS

Operating voltage:	24 V DC ±10 %
Operation current:	25 mA

MECHANICAL CHARACTERISTICS

Terminal:	Plug-in terminal, 2.8 x 0.5 mm
Tightening torque:	Fixing nut max. 0.25 Nm
Weight:	0.018 kg

ACOUSTICAL CHARACTERISTICS

Tone frequency:	Approx. 3.2 kHz continuous tone only
Sound pressure:	95 db (A) ±8 dB at a distance of 0.1m

AMBIENT CONDITION

IP front protection: IP65, according to DIN EN 60529

Operating temperature: – 25 °C ... + 55 °C

Storage temperature: – 40 °C ... + 85 °C

CERTIFICATE

Approbations: CQC, EMC

Conformities: CE, UKCA, 2011 / 65 / EC (RoHS), 2014 / 35 / EU (LVD)

REACH: REACH compliant

RoHS: RoHS compliant

OTHER

Short Description: Actuator, Ø 30.5 mm, Ø 35 mm, Round, Nature, Aluminium, anodised, Plug-in terminal, 2.8 x 0.5 mm, IP65, according to DIN EN 60529

Hints: For PCB application use print adator

Buzzer system: Piezo disc

Wiring diagrams:

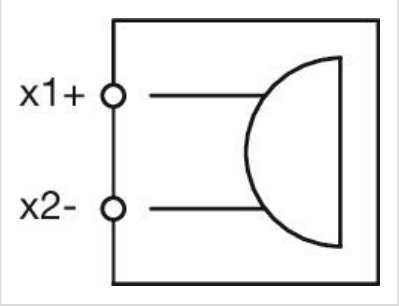

Mounting cut-outs:

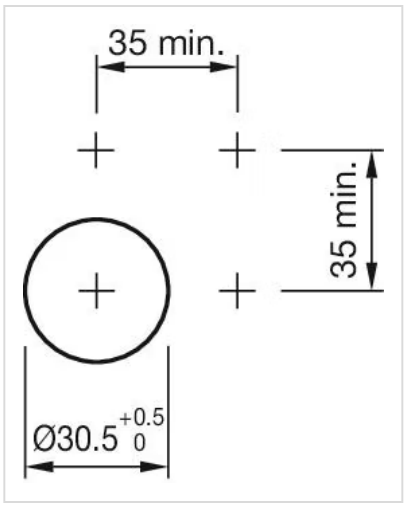

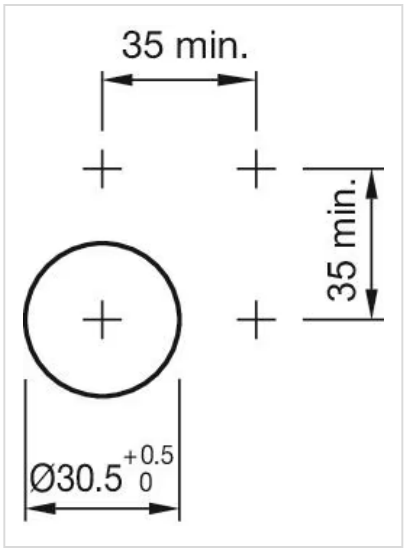

Dimension drawings:

