TRACKBALL FOR PUBLIC ENVIRONMENTS

This 38mm, panel mount trackball provides smooth, accurate and responsive cursor control in wet, dirty or aggressive environments. Sealed against the ingress of fluids and dust the device automatically configures to provide either PS2 or USB connectivity. The robust chassis is designed to provide secure under-panel fixing for maximum resistance to hard use, abuse, and vandalism.

OVERALL DIMENSIONS (Vandal Plate not shown)

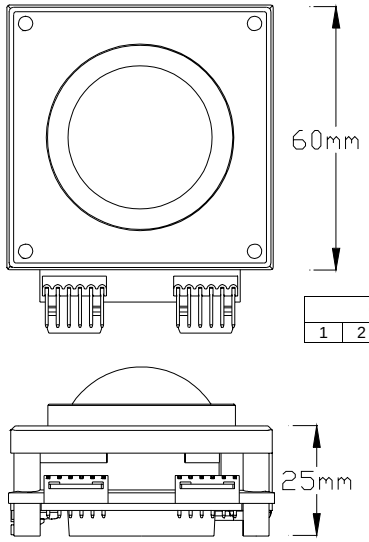

Connector P1					
1	2	3	4	5	6

Connector P3					
1	2	3	4	5	6

PANEL PREPARATION DETAILS

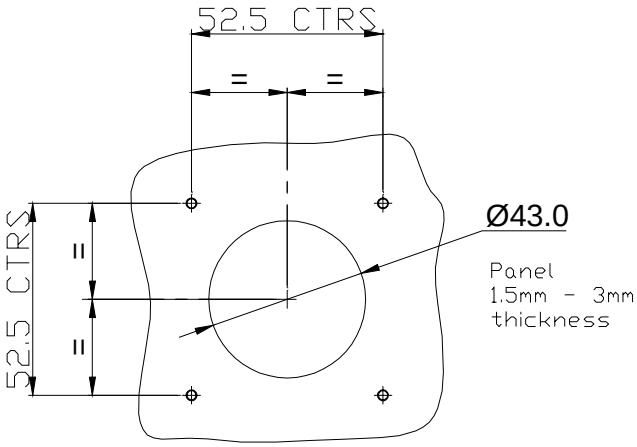

ELECTRICAL
Supply Voltage: 5.0V dc ±10%
Switch Debounce :30ms rising/falling
Supply Current 15mA maximum
Resolution 150 pulses, 600 counts/revolution

MECHANICAL
Tracking Force :50g nominal any direction
Ball Speed : 250 rpm maximum
Operational Life : 10 million revolutions min
Mounting Angle : within ± 45° from horizontal.

ENVIRONMENTAL
Operating Temp: -20°C to +60° C
IP65 seal when ball stationary
IP54 seal when ball rotating
Humidity: 95% Rh max, non-condensing

MATERIAL
Robust Trackball: Phenolic Resin
Vandal Resist. Trackball: Surface Teated Steel
Seal Material :PTFE with low friction fill
Vandal Plate :Stainless Steel
NB. Robust Version does not have Vandal Plate

INSTALLATION
Prepare plate with hole for ø43.0mm bezel and
M3 x 40mm studs on 52.5mm centres
Fit sealing gasket to trackerball
Place trackball over studs
Place vandal plate over studs (VR version only)

Secure with plain washers and Nyloc nuts
IMPORTANT : Max torque 40Ncm on nuts
Connect switch cable to P1
If reqd,fit jumper to enable both buttons as left click
Connect PS2 or USB cable to connector P3

Connector Pinout Details		
Pin	*Button Connections (P1)*	*USB / PS2 Output Connections (P3)*
1	*0V*	*D- / DATA*
2	*Button 1(Left)*	*D+ / CLOCK*
3	*0V*	*TEST ONLY*
4	*Button 2(Right)*	*Power +5V*
5	*0V*	*Ground 0V*
6	*Button3(Middle)*	*Not Used*

The unit automatically selects either USB or PS/2 protocols on power-up without setting any DIP switches.
If both buttons are required to be set as left click then fit the supplied jumper between connectors P1 and P3
Please note that the TEST input is reserved for factory test only. On no account should a connection be made to this terminal.
The Button inputs are pulled high within the unit to the 5V power supply via approximately 7kΩ. Both rising and falling edges of this signal are debounced for 30ms.
The Storm Trackerball is designed to work with resident drivers and does not require any further software to be loaded.

ORDERING DETAILS

Cable 2.5m PS2	*2200-00200[x]*
Cable 2.5m USB	*2200-00300[x]*
Trackerball Unit PS2/USB Black Phenolic Ball	*2200-00020[x]*
Trackerball Unit PS2/USB Stainless Steel Ball	*2200-00030[x]*

TRACKBALL

Whilst every effort is made to ensure details are correct at time of print, specifications are subject to change without notice.

usa office:
storm data entry technology
suite 202
364 pennsylvania avenue
glen ellyn IL 60137 USA
tel: (630) 469 2981
fax: (630) 469 2975
email: sales.usa@storm-keypads.com
website: www.storm-keypads.com

uk office:
keymat technology ltd
14 bentinck court
bentinck road
west drayton
middlesex ub7 7rq
tel: +44 (0)1895 431421
fax: +44 (0)1895 431132
email: sales@keymat.com
website: www.keymat.com

FM39602

Storm is a trademark of Keymat Technology Ltd

220-TB-08KT Issue 1 September 2002