

Image may differ from product. See technical specification for details.

QJ 334 N2MA

Four-point contact ball bearing with locating slots

Four-point contact ball bearings with locating slots can accommodate high axial loads in both directions and small radial loads. They can operate at very high speeds and are more suitable than deep groove ball bearings for supporting large axial forces. The outer ring,

with ball and cage assembly, can be mounted separately from the two inner ring halves. The locating slots can be used to prevent the outer ring from rotating.

- High-speed capability
- Accommodate high axial loads in both directions and small radial loads
- Require considerably less axial space than double row angular contact ball bearings
- The locating slots can be used to prevent the outer ring from rotating

Overview

Dimensions

Bore diameter	170 mm
Outside diameter	360 mm
Width	72 mm
Contact angle	35 °

Performance

Basic dynamic load rating	655 kN
Basic static load rating	1 040 kN
Limiting speed	3 200 r/min
SKF performance class	SKF Explorer

Properties

Contact type	Four-point contact
Number of rows	1
Locating feature, bearing outer ring	Locating slot
Ring type	Two-piece inner ring and one-piece outer ring
Cage	Machined metal
Matched arrangement	No
Universal matching bearing	No
Axial internal clearance	CN
Material, bearing	Bearing steel
Coating	Without
Sealing	Without
Lubricant	None
Relubrication feature	Without

Logistics

Product net weight	38.1 kg
eClass code	23-05-08-05
UNSPSC code	31171538

Technical specification

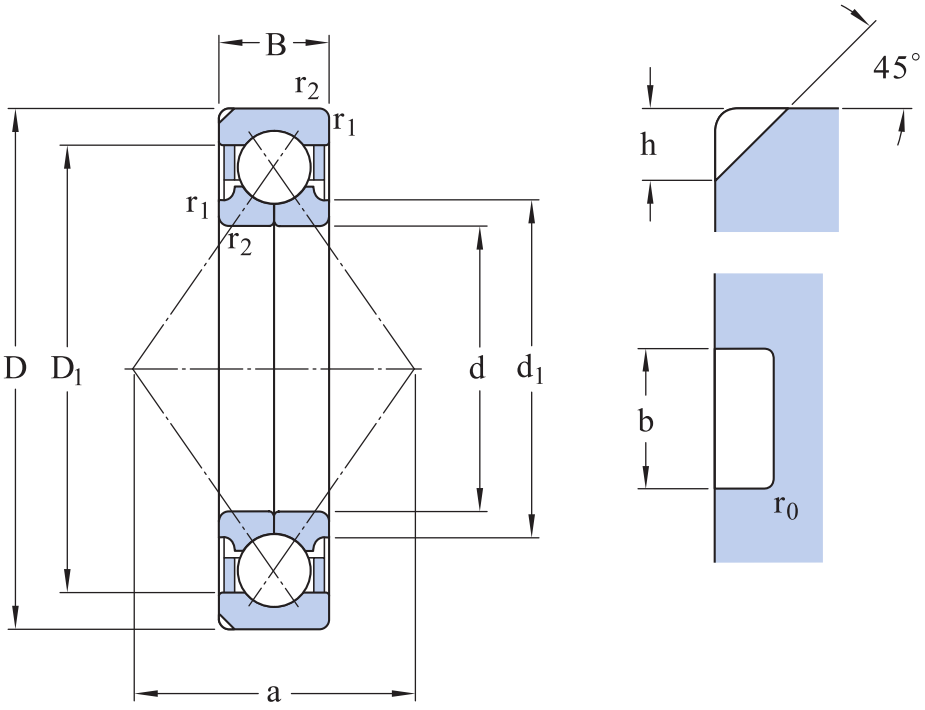

Dimensions

d	170 mm	Bore diameter
D	360 mm	Outside diameter
B	72 mm	Width
d_1	≈ 237 mm	Shoulder diameter inner ring
D_1	≈ 293 mm	Shoulder diameter outer ring/ inner diameter housing washer
a	186 mm	Distance pressure point(s)
h	12.7 mm	Locating slot depth outer ring
b	10.5 mm	Locating slot width outer ring
r_0	2 mm	Corner radius locating slot
$r_{1,2}$	min. 4 mm	Chamfer dimension inner ring

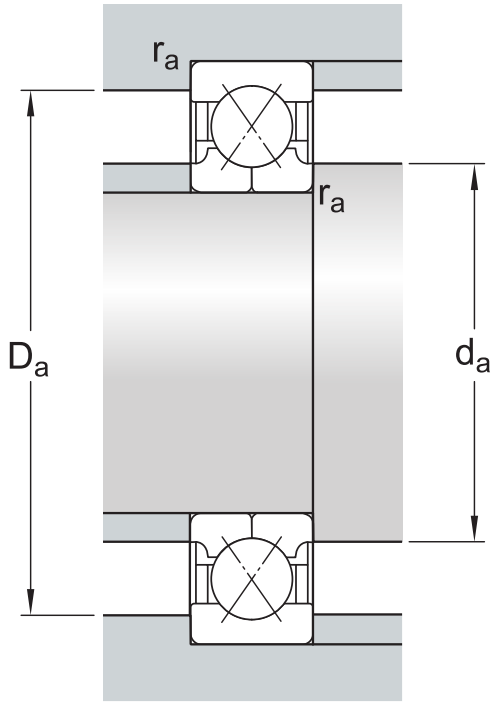

Abutment dimensions

d_a	min. 187 mm	Abutment diameter shaft
D_a	max. 343 mm	Abutment diameter housing
r_a	max. 3 mm	Fillet radius

Calculation data

SKF performance class		SKF Explorer
Basic dynamic load rating	C	655 kN
Basic static load rating	C_0	1 040 kN
Fatigue load limit	P_u	27 kN
Limiting speed		3 200 r/min
Calculation factor	A	2.92
Limiting value	e	0.95
Calculation factor	X	0.6
Calculation factor	Y_0	0.58
Calculation factor	Y_1	0.66
Calculation factor	Y_2	1.07

Tolerances and clearances

GENERAL BEARING SPECIFICATIONS

- Tolerances: Normal, P6
- Internal clearance: table

BEARING INTERFACES

- Seat tolerances for standard conditions
- Tolerances and resultant fit

More Information

Product details

- Designs and variants
- General bearing specifications
- Loads
- Temperature limits
- Permissible speed
- Design considerations
- Designation system

Engineering information

- General bearing knowledge
- Bearing selection process
- Bearing interfaces
- Seat tolerances for standard conditions
- Selecting internal clearance or preload
- Lubrication
- External sealing, mounting and dismounting
- Bearing failure and how to prevent it

Tools

- SKF Product select
- SimPro Quick
- Bearing Frequency Calculator
- LubeSelect for SKF greases
- Heater selection tool
- SKF mounting and dismounting instructions

Terms of use

By accessing and using this website / app owned and published by AB SKF (publ.) (556007-3495 · Gothenburg) (“SKF”), you agree to the following terms and conditions:

Warranty Disclaimer and Limitation of Liability

Although every care has been taken to assure the accuracy of the information on this website / app, SKF provides this information "AS IS" and DISCLAIMS ALL WARRANTIES, EXPRESS OR IMPLIED, INCLUDING, BUT NOT LIMITED TO, IMPLIED WARRANTIES OF MERCHANTABILITY AND FITNESS FOR A PARTICULAR PURPOSE. You acknowledge that your use of this website / app is at your sole risk, that you assume full responsibility for all costs associated with use of this website / app, and that SKF shall not be liable for any direct, incidental, consequential, or indirect damages of any kind arising out of your access to, or use of the information or software made available on this website / app.

Any warranties and representations in this website / app for SKF products or services that you purchase or use will be subject to the agreed upon terms and conditions in the contract for such product or service.

Further, for non-SKF websites / apps that are referenced in our website / app or where a hyperlink appears, SKF makes no warranties concerning the accuracy or reliability of the information in these websites / apps and assumes no responsibility for material created or published by third parties contained therein. In addition, SKF does not warrant that this website / app or these other linked websites / apps are free from viruses or other harmful elements.

Third Party Services

When viewing YouTube content via the SKF website(s) (i.e. using YouTube API Services), you agree to be bound by the YouTube Terms of Service.

Copyright

Copyright in this website / app copyright of the information and software made available on this website / app rest with SKF or its licensors. All rights are reserved. All licensed material will reference the licensor that has granted SKF the right to use the material. The information and software made available on this website / app may not be reproduced, duplicated, copied, transferred, distributed, stored, modified, downloaded or otherwise exploited for any commercial use without the prior written approval of SKF. However, it may be reproduced, stored and downloaded for use by individuals without prior written approval of SKF. Under no circumstances may this information or software be supplied to third parties.

This website /app includes certain images used under license from Shutterstock, Inc.

Trademarks and Patents

All trademarks, brand names, and corporate logos displayed on the website / app are the property of SKF or its licensors, and may not be used in any way without prior written approval by SKF. All licensed trademarks published on this website / app reference the licensor that has granted SKF the right to use the trademark. Access to this website / app does not grant to the user any license under any patents owned by or licensed to SKF.

Changes

SKF reserves the right to make changes or additions to this website / app at any time.