THE INFORMATION CONTAINED IN THIS DRAWING IS THE SOLE PROPERTY OF L-COM, INC. ANY REPRODUCTION IN PART OR WHOLE WITHOUT THE WRITTEN PERMISSION OF L-COM, INC. IS PROHIBITED.

REVISIONS			
REV	DESCRIPTION	DATE	CHANGED BY
A	RELEASED FOR PRODUCTION	08/02/01	McCORMICK
B	ECN 1668 CHANGED BODY MATERIAL FROM STEEL	02/11/04	MCCORMICK
C	ECN #2871: REVISED SMA VIEW FROM PLUG TO JACK	5/31/07	D.FRISIELLO
D	ECN 3124: UPDATE DWG FORMAT	12/26/07	D.GRIFFIN

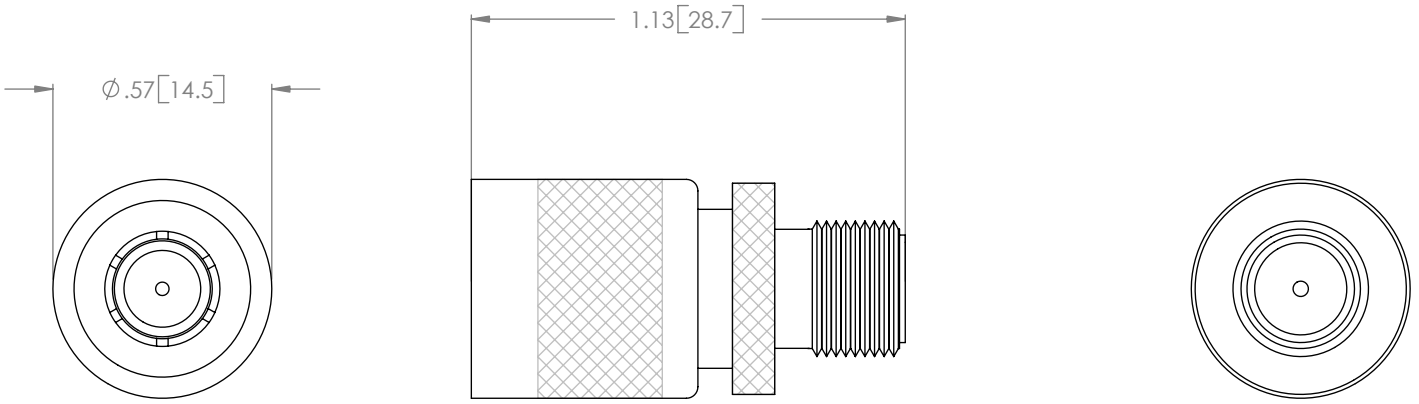

TNC PLUG

SMA JACK

NOTES:

MATERIAL:
BODY: BRASS
INSULATOR: PTFE
PIN: BRASS

FINISH:
BODY: NICKEL PLATED
PIN: GOLD PLATED

ELECTRICAL:
IMPEDANCE: 50 OHM

RoHS Compliant ✔

UNLESS OTHERWISE SPECIFIED, DIMENSIONS ARE IN INCHES [mm]
TOLERANCES TO BE:
.X ±.1 [2.5] ANGLES ±2°
.XX ±.01 [.25]
.XXX ±.005 [.13]
OVERALL CABLE LENGTH TOL:
≤ 60 [1524] +3 [76.2] / - 0
> 60 [1524] +5% / -0%

PROJ

APPROVALS	DATE
DRAWN BY MCCORMICK	08/02/01
CHECKED BY D.PARHAM	08/02/01
APPROVED BY R.CARRICK	08/03/01

CONFIGURATION DETAILS OF UNDIMENSIONED FEATURES MAY VARY

L-com CONNECTIVITY PRODUCTS
45 BEECHWOOD DRIVE
NORTH ANDOVER, MA
01845

CATEGORY: COAXIAL

PRODUCT DESCRIPTION: TNC PLUG TO SMA JACK

SIZE	FSCM NO.	DWG. NO.	REV.
A	43321	BA589	D

SCALE: NONE | CAD FILE: BA589.SLDDRW | SHEET 1 OF 1