Electronic Audible Signal Devices / Electronic Buzzers Installation 107

Installation Buzzer Contin. 115-230VAC



Part No.: 107.000.60

MECHANICAL DATA	
Height	61 mm
Diameter	28 mm
Materials	PA-GF
Housing colour	Black
Protection category	IP65
Connection	Screw terminals
cross-sectional area maximum	1,50mm² / 16AWG
Type of fixing	Built-in mounting
Working temperature minimum	-20°C
Working temperature maximum	+50°C
Weight with packaging	32 g
Product weight	20 g

ELECTRICAL DATA	
Operating voltage	115-230V
Operating voltage type	AC
Operating voltage frequency	50Hz at 230V
Operating voltage tolerance	+/- 10%
Rated operational voltage	230 VAC
Rated operational current	12 mA
Rated inrush current	360 mA
Protection class	Protection class 2
Pollution degree	3 In the connection area: 2
Isolation voltage	Ui = 250V; Uimp = 2.500V

ACUSTICAL DATA	
Volume (max) at 1m distance	60,0 dB (A)
Volume (max) at 10cm distance	80,0 dB (A)
Acoustic signal image	Continuous tone
Number of tones	1 tone
Audio frequency	2400 Hz
Acoustic service life	5,000 h minimum

APPROVAL DATA	
Conforms with CE	yes
WEEE	yes
Conforms with RED directive	No
Conform with ATEX-directive	no

! For additional installation and mounting information, refer to the appropriate user guide at www.werma.com. This printed copy is for information only and is subject to alteration.

Electronic Audible Signal Devices / Electronic Buzzers Installation 107

Installation Buzzer Contin. 115-230VAC

Conforms with CCC	no
Conforms with UL	cULus
UL Type Rating	Type 4X
Conforms with FCC	no
Conforms with IC	No
EAC Zertifikat vorhanden	yes
Conforms with AS-I	no
Conforms with GL	no
Conforms with RoHS CN	no
Conforms with VdS	no

DRAWING

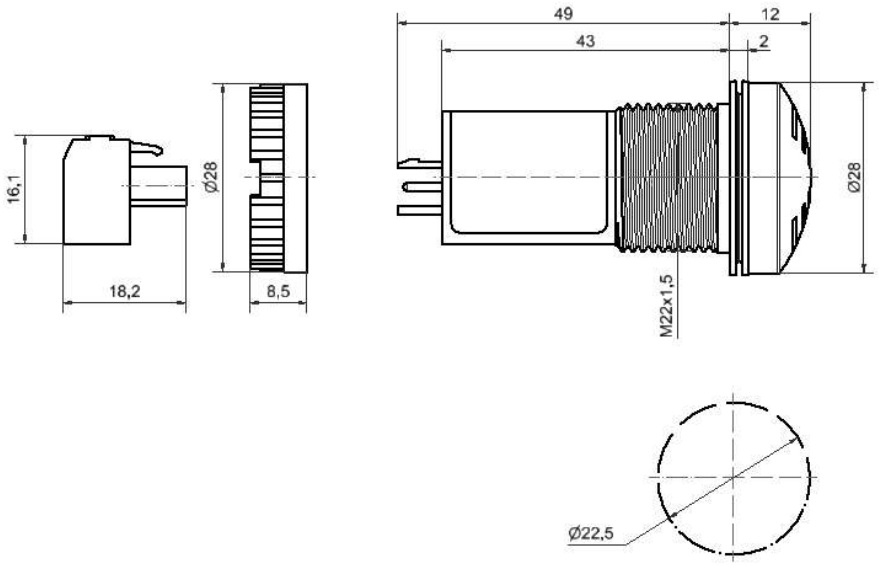

! For additional installation and mounting information, refer to the appropriate user guide at www.werma.com. This printed copy is for information only and is subject to alteration.