E30399

Cable clamp fastener

CABLE STRAINING CLAMP

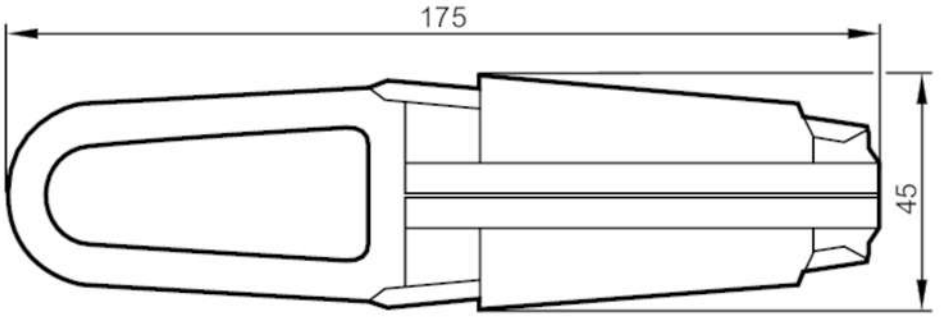

Application		
Design		for submersible pressure transmitter PS3
Mechanical data		
Weight	[g]	169.4
Materials		steel; plastics
Remarks		
Pack quantity		1 pcs.