EL-USB-5+

Extended Memory, Event, State Change & Counter Data Logger

- Functions as an event, state change and event counter data logger
- Over 1 million readings
- Log up to 2 state changes/second or 4 events/second
- Volt free contacts option (normally open contact only)
- Rising and falling edge triggering
- Connection via two screw terminals
- Status indication via red and green LEDs
- EasyLog software available as free download



This stand-alone data logger can record events (detecting an input and storing the time and date), record state changes (similar to an 'event' but also recording when the input reverts back to normal) and count events (count the number of events that happen during a timed interval). Over 1 million events or state changes can be recorded, or over 1 million timed intervals in count per mode (with up to 65,000 counts per interval).

Events and state changes can be triggered by either a rising edge (a voltage going from low to high) or falling edge (a voltage going from high to low). It is also possible to use volt free contacts. Instead of measuring an external voltage, the data logger applies a voltage across the screw terminals and detects when the input closes (i.e. a relay or microswitch). The logger can record events at speeds of up to four times per second and state changes at speeds of up to two times per second. In counting modes the logger can operate at speeds of up to 100 counts per second.

The user can easily set up the logger and view downloaded data by plugging the data logger into a PC's USB port and using the available free downloadable EasyLog software. Data can then be graphed, printed and exported to other applications.

The data logger is supplied complete with a lithium metal battery, which gives up to one year's logging life. The data logger also comes with a set of measurements leads terminated in crocodile clips.

SPECIFICATIONS

Maximum Event/State Change Frequency	2Hz
Minimum time in State	100ms
Resolution Event /State Mode	100ms*
Maximum Count/Count Per Frequency	100Hz**
Input Voltage	3 to 28V d.c.
Operating Temperature Range	-35 to +80°C (-31 to +176°F)
Battery Life	1 Year*
No. of Readings	1,007,616
Dimensions	98 x 26.8 x 26.8 mm

*Depending on operating mode
** 40Hz maximum when event LED is enabled

ACCESSORIES

BAT 3V6 1/2AA	Replacement Battery
USB-CAP-5	Replacement Cap

INCLUDED IN THE BOX

BAT 3V6 1/2AA	Battery
USB-CAP-5	Cap
EL-USB-LEADS	Measurement Leads
EL-USB-WALL BRACKET	Mounting Bracket

EL-USB-5+

Extended Memory, Event, State Change & Counter Data Logger

EasyLog

EASYLOG SOFTWARE

Lascar's EasyLog control software is available as a free download from www.easylogusb.com. Easy to install and use, the control software is compatible with 32-bit and 64-bit versions of Windows 7, 8 and 10 The software is used to set up the logger, download, graph and annotate data or export in Excel, PDF and jpeg formats.



The software allows the following parameters to be configured:

- Logger name
- Logging mode (event/state/count/count per interval)
- Immediate and delayed logging start

Download the latest version of the software free of charge from www.easylogusb.com

LED STATUS INDICATION

	Green single flash *(Every 10 Seconds)* The data logger is currently logging.
	Green single flash *(Every 20 Seconds)* The data logger is currently logging battery is low and should be replaced before logging important data.
	Green single flash *(Every 30 Seconds)* The data logger is not currently logging, but is primed to start at a later date and time *(Delayed start).*
	Green double flash *(Every 20 Seconds)* The data logger is full and has stopped logging.
	Red single flash Event/State change/Count recorded.

VOLTAGE INPUT RANGE

The logger features a selectable voltage input range, which allows the logger to operate with a wide variety of system. Each input range has a different high and low 'trigger voltage' (i.e the voltage at which the logger considers a signal to be high or low).

Voltage range	Low trigger voltage	High trigger voltage
0 - 3V	0.8V	2V
0 - 5V	1.3V	3.4V
0 - 12V	3.2V	8V
0 - 24V	6.4V	16V

EL-USB-5+

Extended Memory, Event, State Change & Counter Data Logger

CONNECTION & APPLICATIONS

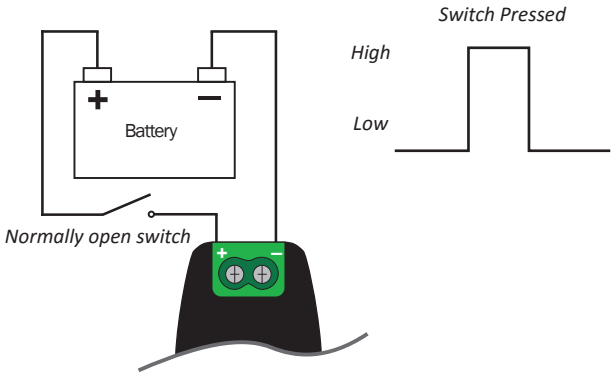

Event recording in 'voltage triggering' mode, using a battery and switch.

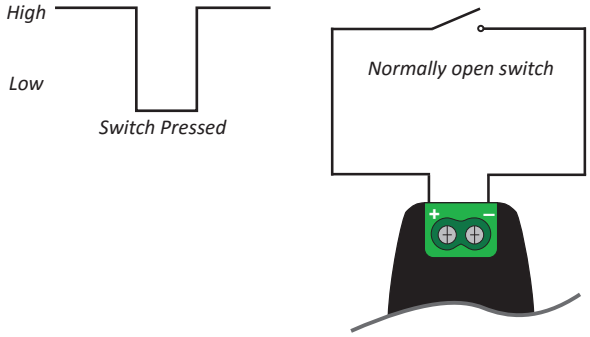

Event recording in 'volt free contacts' mode, using a switch only.

BATTERY INFORMATION

Replacement

We recommend that you replace the battery annually, or prior to logging critical data. Only use 3.6V ½AA lithium metal batteries. The data logger does not lose its stored readings when the battery is discharged or replaced; however, the data logging process will stop and will not resume until the battery is replaced and the logger restarted by EasyLog software.

Before replacing the battery, remove the data logger from the PC. Please note that leaving the data logger plugged into the USB port for extended periods will cause some of the battery capacity to be lost.

Passivation

If left unused for extended periods of time, lithium metal batteries including those used in the EasyLog range of data loggers naturally form a non-conductive internal layer, preventing them from self-discharge and effectively increasing their shelf life. When first installed in the data logger, this may cause a momentary drop in the battery voltage (the Transient Minimum Voltage) as the internal layer is broken down, resulting in the data logger resetting. Inserting the batteries in the data logger and leaving it connected to a PC for about 30 seconds will remove this layer. After this, remove and re-install the batteries to reset the data logger. Overall battery life will not be affected.

WARNING

Handle lithium metal batteries carefully, observe warnings on battery casing. Dispose of in accordance with local regulations.