MODEL: BU-P3534

BNC connector Right Angle (Female to Male)

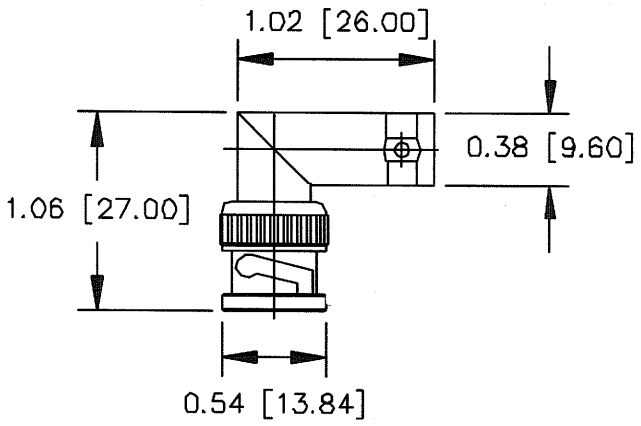

MATERIALS:
Body – Nickel Plated Brass
Contacts – Gold plated Beryllium Copper
Insulator – PTFE

RATING:
Voltage: Shield/Earth: 30 VAC Max.
Temperature: -50°C to 170°C
Impedance: 50 Ohms