MAIN CATALOGUE 2009/10

HUMIDITY AND TEMPERATURE MEASUREMENT



rotronic

LEADING IN HUMIDITY MEASUREMENT

HOW TO CONTACT ROTRONIC?

ROTRONIC is a family owned group of companies with headquarters in Switzerland, and subsidiaries and distributors world-wide. Contact information can be found at www.rotronic-humidity.com.

Rotronic Instruments (UK) Ltd is a wholly owned subsidiary of Rotronic AG, with a team of sales, technical and support staff dedicated to humidity measurement products.

Buying from ROTRONIC UK

Contact our experienced sales team for product and application advice, current pricing and availability. Our field sales team offer on-site application consultancy and product technical support throughout the United Kingdom. Terms and conditions of trading see page 103.

Warranty

All ROTRONIC products now have a 24 month warranty.

Service and Calibration

Our technical support team offer a wide range of services including repairs, calibration and service contracts. Contact service@rotronic.uk.

The ROTRONIC UK Humidity team

Directors

Robin Farley (UK), Michael Taraba (Switzerland)

Service and Calibration

Richard Gee, Mark Smith, Chris Aicken

Sales Administration

Patrick Dryden

Technical Sales

Mike Hibbert, Chris Fox, Scott Porter

Accounts

Lynette Mahon

Our Service to You

- Competitive prices
- High quality products
- ISO9001 production quality system
- Comprehensive 24 month warranty
- Dedicated team, specialising in humidity
- 48 hour turnaround on repairs and calibration on request
- UKAS calibration laboratory

How to contact us.

By Phone

+44 (0) 1293 571000

By Fax

+44 (0) 1293 571008

By Post

ROTRONIC Instruments (UK) Ltd
Crampton Fields, Crompton Way
Crawley, West Sussex RH10 9EE, UK

By E-Mail

instruments@rotronic.co.uk

By Internet

www.rotronic.co.uk



ROTRONIC: LEADING IN HUMIDITY MEASUREMENT

ROTRONIC has been manufacturing humidity instruments since 1967. To provide our customers with the best precision and flexibility at competitive prices for a wide range of applications, we continuously develop our products to stay at the forefront of humidity measurement technology.

All products are developed, manufactured and tested at our headquarters in Switzerland within an ISO 9001:2000 quality system. Our in-house SCS accredited calibration laboratory (SCS 065) and professional service team are able to repair and calibrate instruments even after many years of use. We also have a worldwide network of subsidiaries and distributors with specialists who have been trained in the sales and servicing of ROTRONIC products.

We have a dedicated team of development engineers and experts who work continuously on new designs and products enhancements. A team of technicians assemble the high quality products that will provide precise measurement results for many years. Additionally there is our service division and calibration laboratory, where probes are calibrated, adjusted and certified. If a problem should arise, instruments can be repaired or replaced within the shortest possible time.

With years of experience with humidity instrumentation, ROTRONIC is ideally placed to provide OEM solutions for almost any application. This is a convenient and affordable way for OEM's to access precise and customised measurement products without the high cost of development. Contact us, and we'll help you find the ideal solution.

ROTRONIC benefits

- Comprehensive warranty
- Market leading accuracy
- ISO 9001 quality with adjustment certificate for all instruments
- Validated Windows software
- Products comply with all current industrial standards
- More than 40 years of experience in humidity measurement
- Environmentally conscious

AIRCHIP3000 TECHNOLOGY

Electronics.

ROTRONIC pioneered digital technology in humidity instruments with the HygroClip concept. After ten succesful years, the time was right for new and advanced electronics.

AIR CHIP TECHNOLOGY

The result of our intensive research and development work is the AirChip3000 found in the latest generation of our products, giving them a degree of flexibility, precision and functionality that was not previously possible.

This innovation in humidity and temperature measurement has much to offer:

- measures relative humidity, temperature and calculates dew point.
- excellent reproducibility
- conforms to FDA 21 CFR Part 11 and GAMP4 (audit trail)
- auto-diagnostics and digital multi-point adjustment
- can be used as a simulator tool for system qualification
- UART interface for digital data and two analog signals 0...1 V

ROTRONIC HygroClip2 probes can be connected to all new-generation instruments and interchanged without the need for further calibration or adjustment.



Humidity sensors.

We have developed the Hygromer® sensor continuously since its introduction in 1979, always using the best materials and state of the art production techniques. Even today it still has the widest application range of any humidity sensor on the market at 0...100 %rh and -100...200 °C.

Its long term stability is legendary and many sensors manufactured 20 or more years ago are still in daily use today. It is also able to withstand exposure to condensation without influencing its calibration.

The Hygromer® sensor is used in all ROTRONIC products in the Hygromer® and HygroClip® ranges.



Mechanical components.

Use of the right mechanical components is essential for precise measurement of humidity and temperature. The best humidity sensors and best electronic systems cannot compensate measurement errors caused by mechanical inadequacies at the point of measurement. ROTRONIC probes therefore combine excellent mechanical stability with optimal thermal properties to achieve the highest possible measurement performance.



Accuracy.

HygroClip2 probes are adjusted according to international standards with an air flow of 1 m/s at 23 ±5 °C. Accuracy ranges between ±2 %rh / 0.3 K and ±0.5 %rh / 0.1 K depending on the product and adjustment profile selected. Accuracy specifications in this catalogue are defined by product comparison with the reference instruments used in our production plants (traceable to national standards). All the information in this catalogue is correct and true as at the time of publication. Subject to technical change without notice. Errors and omissions excepted.

CONTENTS

Probes 6-14
HygroClip probes / Probes for special applications

HygroFlex transmitters 15-42
HygroFlex series / HTS

Handheld instruments 43-47
HygroPalm series / Instruments for the paper industry

Data loggers 48-52
HygroLog series / Docking stations

Meteorology 53-60
Weather protection shields / Meteorology probes

Water activity 61-68
HygroLab laboratory display units / Water activity stations and probes / Accessories for water activity measurement

Temperature measurement 69-75
TF4 series / ThermoPalm / Pt100 probes

Networkable products and software 76-85
HF456 series / Bus systems / Software overview

Services 86-87
Calibration / Validation / Service division

Calibration 88-94
Humidity standards and calibration devices / HygroGen series / Certificates

OEM products 95-98
XA series, sensors

Accessories 99-102
Accessories organised by product groups

General conditions of sale and supply 103

HUMIDITY PROBES

HygroClip2 probe



The HygroClip2 is a completely new type of probe in a class of it's own in terms of accuracy and performance. Thanks to the new AirChip3000 technology, it also boasts a unique calibration and adjustment process as well as many other superb innovations. At the same time ROTRONIC has taken humidity measurement technology to a whole new level of performance and reliability: the HygroClip2 offers you the best possible reproducibility and a superb system accuracy of ‹ ±0.8 %rh and ±0.1 K.

The new HygroClip2 is available in various formats: from a simple plug-in probe for handheld instruments and data loggers to the highly developed cable probes for high temperature and other special applications, we can provide you with exactly the right probe to suit your needs. As standard, they all have high accuracy, which can be increased further by specific adjustments within our patented AirChip, making every probe in our range a high-end product for all applications.

Applications

For HVAC monitoring & control, the pharmaceutical industry, building management systems, the paper industry, research, museums and many others.

Highlights

- Measures relative humidity, temperature and dew/frost point
- Records up to 2,000 measurement pairs (%rh/°C)
- Range of application 0...100 %rh / -100...200 °C (depending on probe type)
- UART interface
- Self-testing function
- Trend indication

HygroClip2 **with AirChip3000 technology**



- Compensates temperature and humidity at 30,000 reference points and can store 2,000 measurement pairs. If programmed by the user, it can self test and correct deviations automatically
- Freely configurable. Signal scaling, alarm limits and data logging intervals can be set by the user
- Active information and alarm generation
- Combines an ASIC (application specific integrated circuit), a microcontroller and a memory (EEPROM) on one micro-chip
- Thanks to the analog, freely scalable signal (2 x 0...1V) and the UART interface, it can be integrated not only in ROTRONIC products, but also in most OEM and customer solutions
- Can be interchanged in a few seconds without the need for readjustment
- Can be used as a reference in system qualification

STANDARD CLIMATE PROBES

Applications

HVAC, food stores, health inspection agencies, warehouse mapping, building automation systems, paper, textile and pharmaceutical industries

Use

Handheld instruments, data loggers, transmitters, OEM systems

Highlights

- Measures relative humidity, temperature and dew/frost point
- Saves up to 2,000 measurement pairs*
- Range of application 0...100 %rh / -50...100 °C
- UART interface and freely scalable analog signals 0...1 V
- Standard scaling 0...1 V = 0...100 %rh / -40...60 °C
- Probe with adjustment profile 'Standard' factory adjustment certificate



Order code	HC2-S	HC2-SH	HC2-S3	HC2-S3H
Type	Standard probe		Meteorology probe	
Material	Polycarbonate housing			
Color	Anthracite		White	
Adjustment	At 23 °C and 10, 35, 80 %rh			
Accuracy	±0.8 %rh / ±0.1 K	±0.5 %rh / ±0.1 K	±0.8 %rh / ±0.1 K	±0.5 %rh / ±0.1 K
Weight	Approx. 10 g			
Filter	Polyethylene filter included			
Sensor	Hygromer IN-1		Hygromer V-1	
Response time	‹15 s		‹15 s	

* Optional, requires HW4 software

Order code	HC2-R	HC2-R3
Type	Exchange/refurbished probe with new humidity sensor	
Material	Polycarbonate housing	
Color	Anthracite	White
Adjustment	At 23 °C and 10, 35, 80 %rh	
Accuracy	±0.8 %rh / ±0.1 K	
Weight	Approx. 10 g	
Filter	Polyethylene filter included	
Sensor	Hygromer IN-1	Hygromer V-1
Response time	‹15 s	‹15 s

* Optional, requires HW4 software

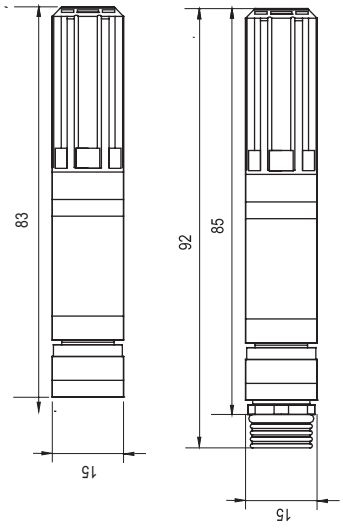

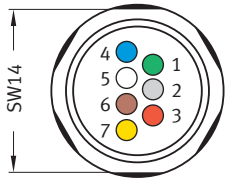

Electrical connections:
(all HygroClip2 probes with connector)

1 V+ (3.2 VDC to max. 5 VDC, ±0%; recommended: 3.3 VDC)
2 GND (ground, digital and power)
3 RXD (UART)
4 TXD (UART)
5 Analog signal %rh (0...100 %rh=0...1 V)
6 Analog signal °C (-40...60 °C = 0...1 V)
7 AGND (analog ground)

You can find detailed up-to-date information on our probes at www.rotronic-humidity.com.



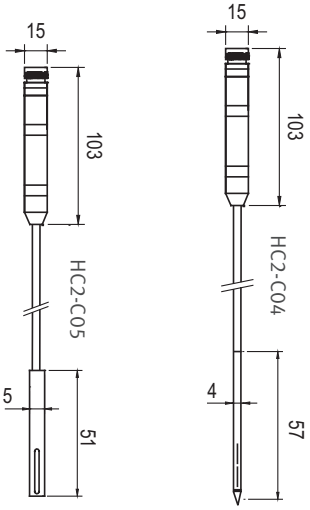

PROBES for measurements in confined spaces

Applications

Measurements in packaging and small spaces where it is not possible to work with standard probes, concrete building structures, research applications, etc.

Use

Handheld devices, data loggers, transmitters, OEM products

Highlights

- Measures relative humidity, temperature and dew/frost point
- Saves up to 2,000 measurement pairs (optional, requires HW4 software)
- Range of application 0...100 %rh / -40...85 °C
- UART interface and freely scalable analog signals 0...1 V
- Standard scaling 0...1 V = 0...100 %rh / -40...60 °C
- Probe with 'Standard' adjustment profile, factory adjustment certificate

Order code	HC2-C04	HC2-C05
Type	Cable probe, Ø 4 mm, cable length ~2m	∅ 5 mm, cable length ~2m
Material	Stainless steel V2A	Brass, nickel-plated
Handle color	Anthracite	
Adjustment	At 23 °C and 10, 35, 80 %rh	
Accuracy	±1.5 %rh / ±0.3 K	
Weight	Approx. 150 g	Approx. 160 g

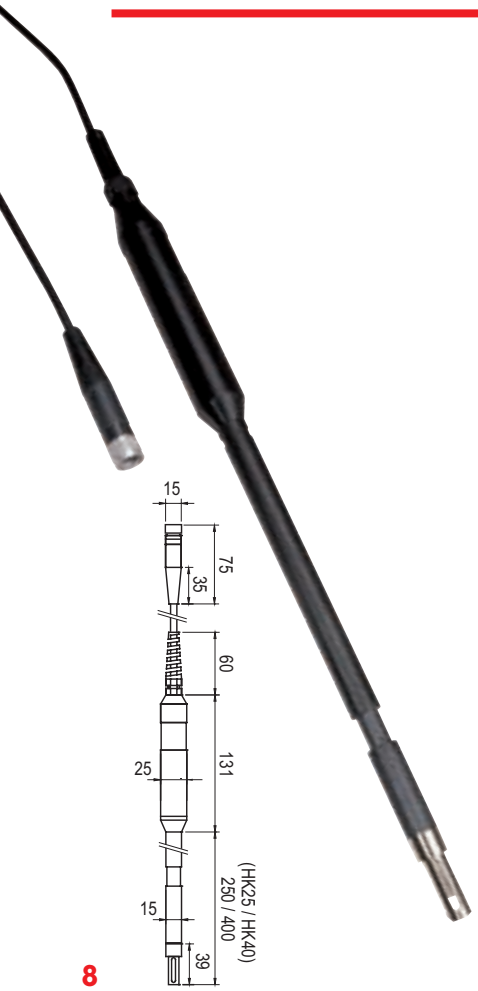

HIGH-TEMP. HANDHELD PROBES 15 mm

Applications

For measurements in air ducts, dryers, climatic chambers, etc. up to 200°C

Use

Handheld instruments and data loggers

Highlights

- Measures relative humidity, temperature and dew/frost point
- Saves up to 2,000 measurement pairs (optional, requires HW4 software)
- UART interface and freely scalable analog signals 0...1 V
- Standard scaling 0...1 V = 0...100 %rh / -40...60 °C
- Probe with 'Standard' adjustment profile, factory adjustment certificate

Order code	HC2-HK25	HC2-HK40
Type	Handheld probe ~2m TPU cable	
Range of appl.	0...100 %rh / -100...150 °C	0...100 %rh / -100...200 °C
Adjustment	At 23 °C and 10, 35, 80 %rh	
Accuracy	±0.8 %rh / ±0.1 K / Response time τ 63: without filter ‹15 s	
Probe length	250 mm	400 mm
Handle color	Anthracite	
Filter carrier	NSP-ME (order filter separately, see pages 99-100)	
Weight	Approx. 210 g	Approx. 240 g

INSERTION PROBE 5 mm, for measurements in bulk materials

Applications

Measurements in dust-free bulk materials, granules, capsules and building materials such as concrete, bricks, etc. Temperature range of application to 85 °C

Use

Handheld devices and data loggers

Highlights

- Measures relative humidity, temperature and dew/frost point
- Saves up to 2,000 measurement pairs (optional, requires HW4 software)
- Range of application 0...100 %rh / -40...85 °C
- UART interface and freely scalable analog signals 0...1 V
- Standard scaling 0...1 V = 0...100 %rh / -40...60 °C
- Probe with 'Standard' adjustment profile, factory adjustment certificate

Order code	HC2-P05
Type	∅ 5 x 200 mm, insertion probe with air slots, ~2m TPU cable
Adjustment	At 23 °C and 10, 35, 80 %rh
Accuracy	±1.5 %rh / ±0.3 K / Response time τ 63: ‹15 s
Handle color	Anthracite
Weight	Approx. 160 g

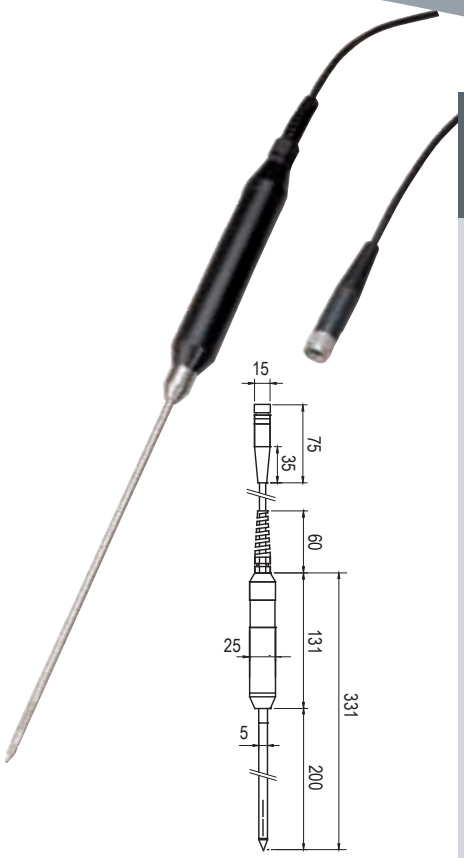

INSERTION PROBES 10 mm, for measurements in bulk materials

Applications

Measurements in dusty bulk materials such as flour, sugar and building materials such as concrete, sand etc. Temperature range of application to 85 °C

Use

Handheld devices and data loggers

Highlights

- Measures relative humidity, temperature and dew/frost point
- Saves up to 2,000 measurement pairs (optional, requires HW4 software)
- Range of application: 0...100 %rh / -40...85 °C
- UART interface and freely scalable analog signals 0...1 V
- Standard scaling 0...1 V = 0...100 %rh / -40...60 °C
- Probe with 'Standard' adjustment profile, factory adjustment certificate

Order code	HC2-HP28	HC2-HP50
Type	Insertion probe with steel sinter filter, ~2m TPU cable	
Adjustment	At 23 °C and 10, 35, 80 %rh	
Accuracy	±0.8 %rh / ±0.1 K / Response time τ 63: ‹20 s	
Probe length	280 mm	500 mm
Handle color	Anthracite	
Steel sinter filter	ET-Z10 included	
Weight	Approx. 200 g	

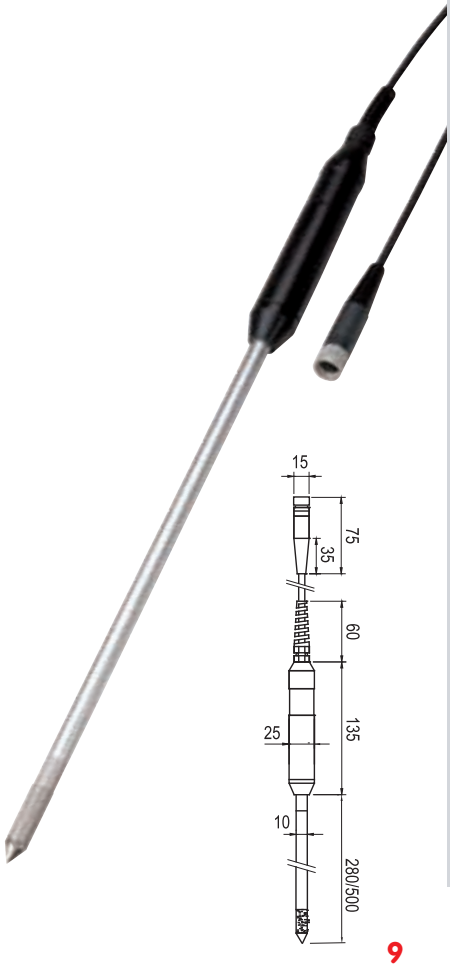

Sword probes 22 x 4 mm

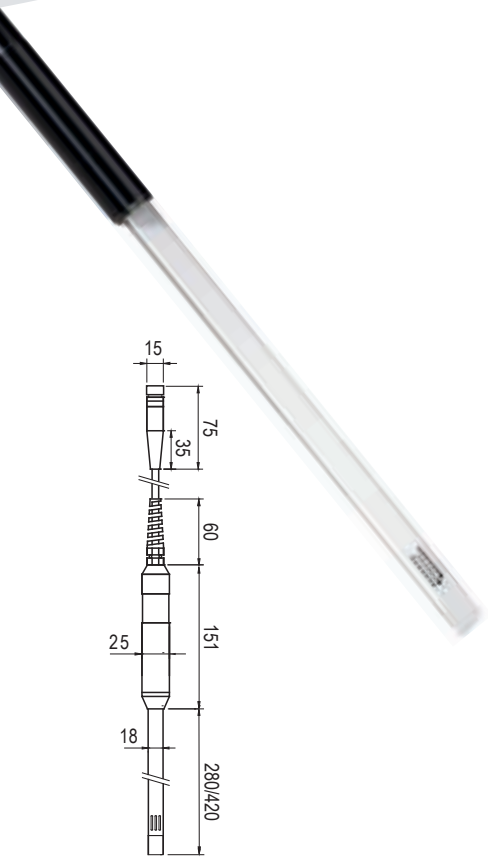

Applications

For measurement in stacks of paper, cardboard, textiles, etc.

Use

Handheld instruments and data loggers

Highlights

- Measures relative humidity, temperature and dew/frost point
- Saves up to 2,000 measurement pairs (requires HW4 software)
- Range of application: 0...100 %rh / -40...85 °C
- UART interface and freely scalable analog signals 0...1 V
- Standard scaling 0...1 V = 0...100 %rh / -40...60 °C
- Probe with 'Standard' adjustment profile, factory adjustment certificate

Order code	HC2-HS28	HC2-HS42
Type	Sword probe with air slots, ~2m TPU cable	
Adjustment	At 23 °C and 10, 35, 80 %rh	
Accuracy	±0.8 %rh / ±0.1 K / Response time τ 63: ‹15 s	
Probe length	280 mm	420 mm
Handle color	Anthracite	
Weight	Approx. 240 g	Approx. 300 g

Industrial probes 15 mm



Applications

Measurements in all environments up to 200 °C such as inudstrial dryers and climatic chambers

Use

Transmitters, handheld devices, data loggers, OEM products

Highlights

- Measures relative humidity, temperature and dew/frost point
- Use as a reference for system validation
- Saves up to 2,000 measurement pairs (requires HW4 software)
- Range of application 0...100 %rh / -100...200 °C
- UART interface and freely scalable analog signals 0...1 V
- Standard scaling 0...1 V = 0...100 %rh / -40...60 °C
- Probe with 'Standard' adjustment profile, factory adjustment certificate

Order code	HC2-IC1xx*	HC2-IC3xx*	HC2-IC4xx*	HC2-IC5xx*	HC2-IC7xx*
	*xx = cable length in m (02, 05, etc), 80g per additional metre				
Type	PPS industrial probe with ROTRONIC connector				
Adjustment	At 23 °C and 10, 35, 80 %rh				
Accuracy	±0.8 %rh / ±0.1 K / Response time τ 63: without filter ‹15 s				
Probe length	100 mm	250 mm	400 mm	550 mm	700 mm
Filter carrier	NSP-ME (order filter separately, see pages 99-100)				
Weight	Approx. 230 g	Approx. 260 g	Approx. 290 g	Approx. 230 g	Approx. 250g

INDUSTRIAL PROBES 15 / 25 mm

Applications

Measurements in all types of industrial processes and environments up to 200 °C

Use

Handheld devices, data loggers, transmitters, OEM products

Highlights

- Measures relative humidity, temperature and dew/frost point
- Use as reference for system validation
- Saves up to 2,000 measurement pairs (optional, requires HW4 software)
- Range of application 0...100 %rh / -100...200 °C
- UART interface and freely scalable analog signals 0...1 V
- Standard scaling 0...1 V = 0...100 %rh / -40...60 °C
- Probe with 'Standard' adjustment profile, factory adjustment certificate

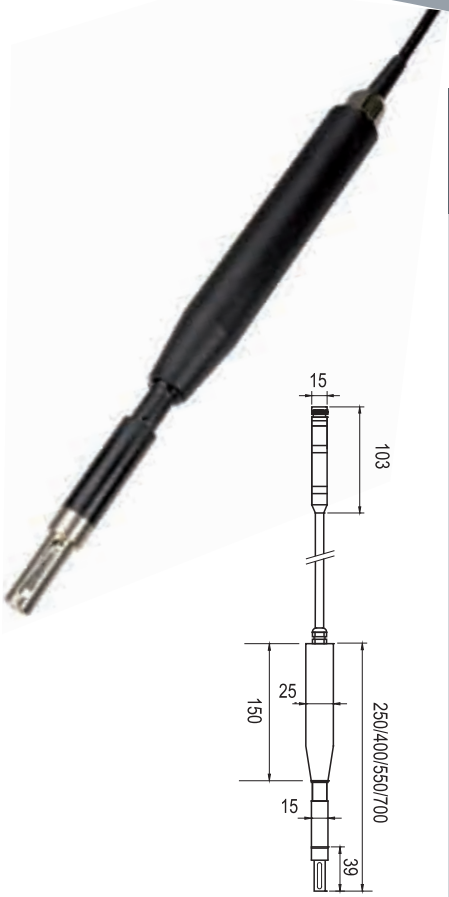

Order code	HC2-IC3xx*-A	HC2-IC4xx*-A	HC2-IC5xx*-A	HC2-IC7xx*-A
	*xx = cable length in m (02, 05) 80 g per m cable length			
Type	PPS industrial probe with ROTRONIC connector			
Adjustment	At 23 °C and 10, 35, 80 %rh			
Accuracy	±0.8 %rh / ±0.1 K / Response time τ 63: without filter <15 s			
Probe length	250 mm	400 mm	550 mm	700 mm
Filter carrier	NSP-ME (order filter separately, see pages 99-100)			
Weight	Approx. 290 g	Approx. 320 g	Approx. 350 g	Approx. 380 g

INDUSTRIAL PROBES 15 mm

Applications

Measurements in all types of industrial processes to 200 °C

Use

Handheld devices, data loggers, transmitters, OEM products

Highlights

- Measures relative humidity, temperature and dew/frost point
- Use as a reference for system validation
- Saves up to 2,000 measurement pairs (optional, requires HW4 software)
- Range of application 0...100 %rh / -100...200 °C
- UART interface and freely scalable analog signals 0...1 V
- Standard scaling 0...1 V = 0...100 %rh / -40...60 °C
- Probe material: DIN 1.4305 or AISI 302 / AFNOR Z10 CNF 18-9
- Probe with 'Standard' adjustment profile, factory adjustment certificate

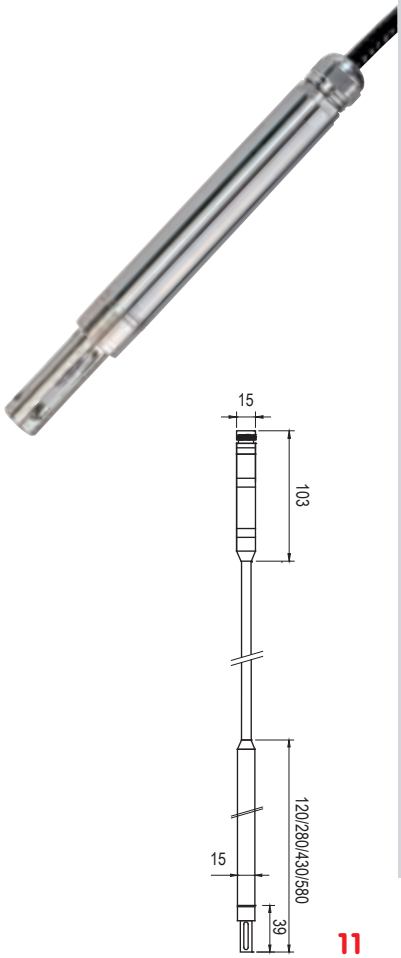

Order code	HC2-IM1xx*	HC2-IM3xx*	HC2-IM4xx*	HC2-IM5xx*
	*xx = cable length in m (02, 05) 80 g per m cable length			
Type	Industrial probe of chrome nickel steel with ROTRONIC connector			
Adjustment	At 23 °C and 10, 35, 80 %rh			
Accuracy	±0.8 %rh / ±0.1 K / Response time τ 63: without filter <15 s			
Probe length	120 mm	280 mm	430 mm	580 mm
Filter carrier	SP-MSB15 (order filter separately, see pages 99-100)			
Weight	Approx. 260 g	Approx. 400 g	Approx. 540 g	Approx. 680 g

Screw-in probes



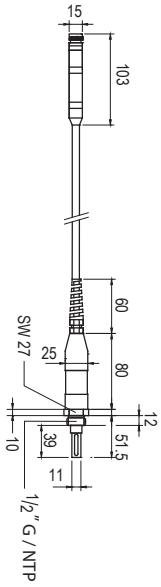

Applications

Measurements in all types of industrial processes up to 100 bar and to 200 °C

Use

Transmitters, OEM products

Highlights

- Measures relative humidity, temperature and dew/frost point
- Screw-in probe with ROTRONIC connector, steel housing
- Suitable for pressures up to 400bar (5800 psi)
- Saves up to 2,000 measurement pairs (optional, requires HW4 software)
- Range of application 0...100 %rh / -100...200 °C / 0...400 bar / 0...5800 PSI
- UART interface and freely scalable analog signals 0...1 V
- Standard scaling 0...1 V = 0...100 %rh / -40...60 °C
- Probe material: DIN 1.4305 or AISI 302 / AFNOR Z10 CNF 18-9
- Probe with 'Standard' adjustment profile, factory adjustment certificate

Order code	**HC2-IE1xx***	**HC2-IE3xx***
	*xx = cable length in m (02, 05) 80 g per m cable length	
Type	½" G with ROTRONIC connector	½" NPT with ROTRONIC connector
Adjustment	At 23 °C and 10, 35, 80 %rh	
Accuracy	±0.8 %rh / ±0.1 K / Response time τ 63: without filter <15 s	
Filter carrier	SP-MSB15 (order filter separately, see pages 99-100)	
Weight	Approx. 290 g	

Detailed specifications	
Power supply / Connections	
Supply voltage (VDD)	HC2-IC, HC2-IM and HC2-IE: 3.3 V ± 0.1 V, other types: 3.2 ...5.0 VDC ±0%
Nominal current consumption	‹4,0 mA at VDD = 3,3 VDC
Humidity measurement	
Sensor	ROTRONIC Hygromer® IN-1 (exception HC2-S3, Hygromer® V-1)
Measurement range	0...100 %rh
Accuracy at 23 °C	±0.8 %rh
Repeatability	0.3 %rh
Long term stability	‹1 %rh/year
Temperature measurement	
Sensor	Pt100 1/3 Class B
Measurement range	-100...200 °C
Accuracy at 23 °C	±0.1 K
Repeatability	0.05 °C
Long term stability	‹1 °C/year
Response time	4 sec for 63 % of the change from 23 to 80 °C (1 m/sec air flow at sensor)
Calculated parameters	
Psychrometric calculations	Dew point or frost point
Start-up time / Refresh rate	‹2 s / ‹0.9 s (main clock 5 MHz)
Configurable analogue outputs	
Output 1 standard	Relative humidity; 0...100 %rh = 0...1 V
Output 2 standard	Temperature -40...60 °C = 0...1 V
Scale limits	-999.99...+9999.99 units, user configurable with HW4 software
Digital interface (service connector)	
Type of interface	UART (universal asynchronous receiver transmitter)
Maximum length service cable	5 m (16.4 ft) without signal amplifier
General specifications	
Housing material	Polycarbonate / ABS
Connector material	Anodized anticorodal aluminium
Filter material	Depending on probe / filter type
Protection	IP 65
CE/EMC compatibility	CE-compliant, 2007/108/EC EN 61000-6-1: 2001, EN 61000-6-2: 2005 EN 61000-6-3: 2005, EN 61000-6-4: 2001 + A11
Solder	Lead-free (RoHS-compliant)
FDA/GAMP compatibility	FDA 21 CFR Part 11 / GAMP 4
Electronics operating range	-50...100 °C / 0...100 %rh, non-condensing
Max. air velocity at probe	40 m/s (7,870 ft/min)

Probes for special applications

We have probes with optimised sensors and/or filters that offer improved resistance to pollutants and other harmful substances in various special applications. They can be ordered with the order numbers given below and connected with a standard handheld, data logger or transmitters

For all special applications involving pollutants and other harmful substances:
To attain optimum accuracy, probes should be calibrated at more regular intervals than usual and adjusted if necessary. ROTRONIC does not keep stock of special probes. It is the customer's responsibility to keep spare probe for critical application scenarios.

Hygromer HH sensor
The HH sensors were specifically developed for use in sterilization processes involving Hydrogen Peroxide (H_2O_2). H_2O_2 is very aggressive and will destroy every sensor sooner or later. The HH sensors are manufactured using a specific formula so that they can resist H_2O_2 and other harmful substances or process chemicals for a longer period of time.

Hygromer V-1 sensor
The Hygromer V-1 sensors are based on the tried-and-tested IN-1 sensor. They were developed for applications with long periods of condensation as often occur in, for example, agricultural meteorology. Robust in construction, they have excellent long term stability and resistance to thawing. At ‹20 seconds, their response times are still very short. This also establishes the sensors for use in drying processes using alcohol in air. Such processes are often used in the food and pharmaceutical industries.

Hygromer M1R
The Hygromer M1R sensors are highly suitable for applications with rapid changes in climatic conditions as typically occur in, for example, high altitude meteorology.

They are used in weather balloons, which pass through immense differences in altitude with corresponding climatic changes in a very short time. The sensor has extremely short response times of ‹3 seconds and still reacts quickly at low temperatures. It may be used in temperatures ranging from -80...140 °C.

It is not possible to specify lifetimes for the sensors because they depend very fundamentally on the particular application. Depending on the humidity, temperature, pollutants/harmful substances involved and the number of cycles, they can vary immensely.

Order code	Application / Harmful substance / Problem	Contains
HC2-S-HH	Disinfection / Sterilization with H_2O_2	HygroClip2 with Hygromer HH
HC2-IC102-HH	Applications with ozone	Industrial HygroClip2 (2 m cable) with Hygromer HH
HC2-S-V1	Agricultural meteorology / Drying with alcohol	HygroClip2 with Hygromer V1
HC-IC102-V1	Climatic chambers to 200 °C	HygroClip2 with Hygromer V1
HC2-S-M1R	Weather balloons: cold, rapid changes in conditions	HygroClip2 with ultra-fast Hygromer M1R



V-1 sensor

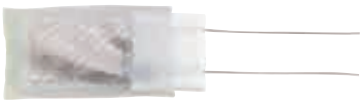
HH1-SK sensor


M3-R sensor

TRANSMITTERS

HygroFlex3 series

The new HygroFlex3 series is the latest development in HVAC transmitters for relative humidity, temperature and dew point. Based on AirChip3000 technology, the transmitters offer high accuracy at a low cost.

The new generation boasts a unique calibration and adjustment process as well as many other unbeatable innovations. At the same time we have taken the sensor technology to a whole new level of performance and reliability:
The HygroFlex3 series offers you maximum reproducibility and a guaranteed system accuracy of ‹±2 %rh and ±0.3 K. The transmitters come in various versions and there are also thermostats/hygrostats available for the duct and wall versions. Many useful functions can be activated with the optional HW4 software.



Applications

HVAC applications in cost-sensitive applications, building management systems, museums, libraries, etc.

Highlights

- Unique calibration and adjustment process
- Highest reproducibility
- Guaranteed system accuracy of ‹2 %rh and 0.3 K
- Space, wall and duct mount versions
- Many useful functions can be accessed with optional HW4 software

AIR CHIP TECHNOLOGY





HF3x Space Mount

Applications

HVAC applications, cost-sensitive installations, building management systems, etc.

Highlights and common features

- Measures relative humidity, temperature and dew/frost point
- Range of application -40…60 °C; -10…60 °C with LCD, 0…100 %rh
- Automatic sensor test & drift compensation *
- Saves up to 2,000 measurement pairs*
- Use as simulator for system validation *
- UART service interface
- Integrated, extractable probe
- Adjustment profile «Standard», factory certificate
- Adjusted at 23 °C and 10, 35, 80 %rh
- Accuracy: ±2 %rh / ±0.3 K

Space version	HF320-S series	HF320-R series
Type	2- or 2 x 2-wire	
Signals	Signals freely scalable *	
Probe	Fixed	Extractable
Integrated LC display	Optional	

* Optional, requires HW4 software

Space version	HF33x-S series	HF33x-R series
Type	3/4-wire	
Signals	Signals freely selectable and scalable by user *	
Probe	Fixed	Extractable
Integrated display	Optional	

* Optional, requires HW4 software

Type R

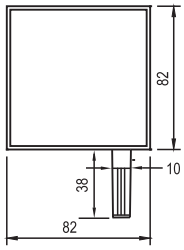

Type S

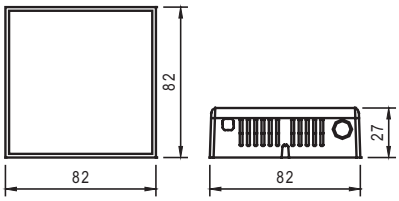

HF3 Wall & Duct Versions

Applications

HVAC applications, cost-sensitive installations, building management systems, etc.

Highlights and common features

- Measures relative humidity, temperature and dew/frost point
- Range of application -40...60 °C, 0...100 %rh
- Automatic sensor test & drift compensation *
- Saves up to 2,000 measurement pairs*
- Use as simulator for system validation *
- UART service interface
- Adjustment profile «Standard», factory certificate
- Adjusted at 23 °C and 10, 35, 80 %rh
- Accuracy: ±2 %rh / ±0.3 K



Duct version
Type D



Wall version
Type W

Duct version	HF320-D series	HF33x-D series
Type	2- or 2 x 2-wire	3/4-wire
Signals	Signals freely scalable*	Signals freely selectable and scalable*
Filter	Polyethylene filter	

Duct version	HF346-D
Type	Thermostat/Hygrostat with 2 single pole changeover relays
Switching range	Scalable*
Switching parameters	Temperature, humidity, dew point
Switch points	Potentiometer & LED for fine adjustment

* Optional, requires HW4 software

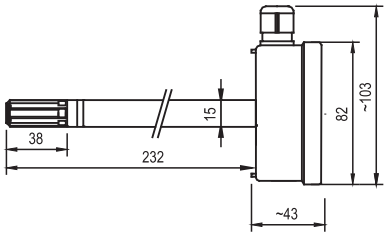

Wall version	HF320-W series	HF33x-W series
Type	2- or 2 x 2-wire	3/4-wire
Signals	Signals freely scalable*	Signals freely selectable and scalable*
Filter	Polyethylene filter	

Wall version	HF346-W
Type	Thermostat/Hygrostat with 2 single pole changeover relays
Switching range	Scalable*
Switching parameters	Temperature, humidity, dew point
Switch points	Potentiometer & LED for fine adjustment

* Optional, requires HW4 software

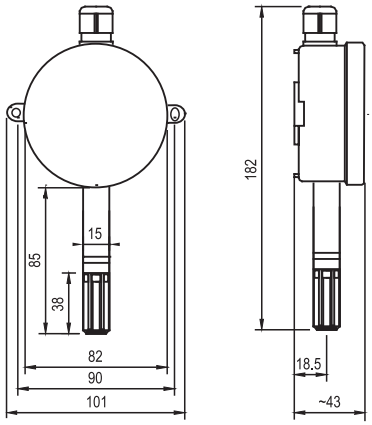

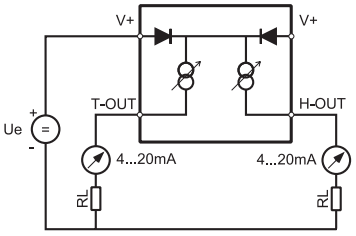

Schematic 2-wire types

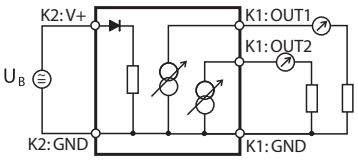

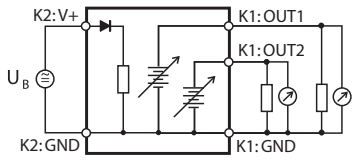

Schematic 3-wire types

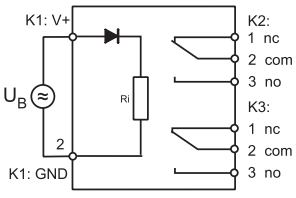

Schematic hygrostat/thermostat

Order information (for accessories see pages 99-102)									
HF3x transmitters with analog signals									
Power supply and output signal type									
HF320-									2- or 2 x 2-wire, ‹28 VDC, common supply V+, 4...20 mA
HF331-									3/4-wire (15...40 VDC / 12...28 VAC, 0...20 mA)
HF332-									3/4-wire (15...40 VDC / 12...28 VAC, 4...20 mA)
HF333-									3/4-wire (5...40 VDC / 5...28 VAC, 0...1 V)
HF334-									3/4-wire (10...40 VDC / 8...28 VAC, 0...5 V)
HF335-									3/4-wire (15...40 VDC / 12...28 VAC, 0...10 V)
Instrument type									
	D				X				Duct mount, Ø 15 x 235 mm (standard)
	S								Space mount
	R								Space mount with external sensor
									(Accuracy: ±1 %rh / 0.2 K)
	W				X				Wall mount, Ø 15 x 85 mm (standard)
Output parameters									
		B				**X**	**X**	**X**	Humidity (0...100 %rh) & temperature
		H				**X**	**X**	**X**	Only humidity (0...100 %rh)
		T				**X**	**X**	**X**	Only temperature
		A							Dew point & temperature
Standard scaling temperature *									
			1	**X**					Temperature (0...50 °C)
			6	**X**					Temperature (0...100 °F)
Optional display									
					D				Backlit display (only HF33x-S)
					X				Without display
Standard scaling dew point / frost point									
						X	**X**	**X**	No calculation
						X	**B**	**X**	-50...50
						X	**C**	**X**	-50...100

Order information (for accessories see pages 99-102)									
Hygrostat / Thermostat HF346									
Power supply									
HF346-									3/4-wire (18...40 VDC / 12...28 VAC)
Instrument type									
	D								Duct mount, Ø 15 x 235 mm (standard)
	W								Wall mount, Ø 15 x 85 mm (standard)
Output parameters relay									
		B			**X**	**X**			Humidity & temperature
		H	**X**	**X**	**X**	**X**			Only humidity
		T			**X**	**X**	**X**	**X**	Only temperature
		A					**X**	**X**	Temperature & dew point
Control range potentiometer temperature *									
			1	**X**					0...50 °C
			6	**X**					0...100 °F
Control range potentiometer dew point / frost point *									
					B	**X**			-50...50
Control range potentiometer humidity*									
							4	**X**	0...100 %rh
* Other scaling on request									

Detailed specifications			
Power supply / Connections	HF32	HF33	HF34
Supply voltage	10...28 VDC	15...40 VDC or	8...40 VDC
	V min = 10 V + (0.02 x load*)	12...28 VAC	12...28 VAC
Current consumption	Max. 2 x 20 mA	‹50 mA	44 mA
Electrical connections	Type D and W: screw terminals and M16 cable gland Type R & S: screw terminals		N/A
Humidity measurement	HF32	HF33	HF34
Sensor	ROTRONIC Hygromer® IN-1		
Measurement range	0...100 %rh		
Accuracy at 23 °C	±2.0 %rh (type D, S and W) / ±1.0 %rh (type R)		±2.0 %rh
Repeatability	0.3 %rh		
Long term stability	‹1 %rh/year		
Response time	Typically 10 s for 63% of a change 35 → 80 %rh (1 m/sec air flow at sensor)		
Temperature measurement	HF32	HF33	HF34
Sensor	Pt100 1/3 Class B		
Measurement range	-40...60 °C / -40...140 °F		
Accuracy at 23 °C	±0.3 K (type D, S and W) / ±0.2 K (type R)		
Repeatability	0.05 °C		
Long term stability	‹0.1 °C/year		
Response time	4 sec for 63 % of a change from 23 to 80 °C (1 m/sec air flow at sensor)		
Calculated parameters	HF32	HF33	HF34
Psychrometric calculations	Dew point or frost point		
Start-up time	Typically 3.4 s	Typically 1.9 s	
Signal type (freely definable by user)	4...20 mA	0...20 mA, 4...20 mA 0...1 V, 0...5 V, 0...10 V	No analog signals
Scale limits	-999.99 ... +9999.99 units		
*Minimum/Maximum load (in Ω)	0/500 Ω	0/500 Ω (current signal), min. 1000 Ω (voltage signal)	
Optional display (only types R and S)	LCD, 1 or 2 decimals, without backlight	LCD, 1 or 2 decimals, with backlight and trend indicator	N/A
Probe material	Polycarbonate, except for types R and S		Polycarbonate
Filter material	Polyethylene, except for types R and S		Polyethylene
Housing material / Protection	ABS / IP 65, except for types R and S: IP 20		
Weight	90 g		105 g
CE/EMC compatibility	EN 61000-6-1: 2001, EN 61000-6-2: 2005 EN 61000-6-3: 2005, EN 61000-6-4: 2001 + A11		
Solder	Lead-free (RoHS-compliant)		
Fire resistance	Conforms to UL94-HB		
FDA/GAMP compatibility	Conforms to FDA21 CFR Part 11 and GAMP4		
Electronics operating range	-40...60 °C / -10...60 °C (models with display) 0...100 %rh, non-condensing		
Temperature limits at probe	-40...60 °C		
Maximum wind velocity at probe	20 m/s (7,870 ft /min), except for types R and S		
Configurable relay outputs	HF34		
Switch point adjustment	Potentiometer with scale (2 one-pole change-over relays)		
Switch point limits	-999.99...+9999.99 units (potentiometer minimum and maximum)		
Relay status indicator	LED (in housing)		
Breaking capacity	250 VAC / 6 A at ohmic load		
Service interface	UART IO D78F0114H (universal asynchronous receiver transmitter)		

TRANSMITTERS

HygroFlex4 Series

The new HygroFlex4 series is the latest development in HVAC transmitters for relative humidity, temperature and dew point. Based on AirChip3000 technology, these precision instruments achieve a new level of accuracy in this category of product, and are more precise than the HF3 series.

The new generation boasts a unique calibration and adjustment process as well as many other unbeatable innovations. At the same time we have taken the sensor technology to a whole new level of performance and reliability:
The HygroFlex4 series offers maximum reproducibility and a system accuracy of ‹±1 %rh and ±0.2 K. The transmitters are available in wall and duct mount versions. Many useful functions can be activated with the optional HW4 software.

Applications

High performance HVAC applications, building management systems, museums, libraries, etc.

Highlights

- Unique calibration and adjustment process
- Highest reproducibility
- System accuracy of ‹ ±1 %rh and ±0.2 K
- Wall and duct versions
- Many useful functions can be activated with the optional HW4 software



AIR CHIP TECHNOLOGY

HF4 Wall & Duct Versions

Applications

HVAC applications, building management systems, museums, libraries, etc.

Highlights and common features

- Measures relative humidity, temperature and dew/frost point
- Range of application -40…60 °C; -10…60 °C with LCD, 0…100 %rh
- Automatic sensor test & drift compensation *
- Records up to 2,000 measurement pairs *
- Use as a simulator for system validation *
- UART service interface
- Integrated probe
- Adjustment profile «Standard», factory certificate
- Adjusted at 23 °C and 10, 35, 80 %rh
- Accuracy: ±1 %rh / ±0.2 K
- Can be mounted on a DIN rail (see accessories, page 102)



Wall version
Type W



Duct version vertical mounting
Type D



Duct version horizontal mounting
Type D

Wall version	HF420-W series	HF43x-W series
Type	2- or 2 x 2-wire	3/4-wire
Signals	Signals freely scalable*	Signals freely selectable and scalable*
Features	Alarm indicators, display and keypad (optional)	
Filter	Polyethylene filter	

Duct version	HF420-D series	HF43x-D series
Type	2- or 2 x 2-wire	3/4-wire
Signals	Signals freely scalable*	Signals freely selectable and scalable*
Features	Horizontal version with display/keypad (optional)	
Filter	Polyethylene filter	

* Requires HW4 software

For networkable transmitters see pages 76-81

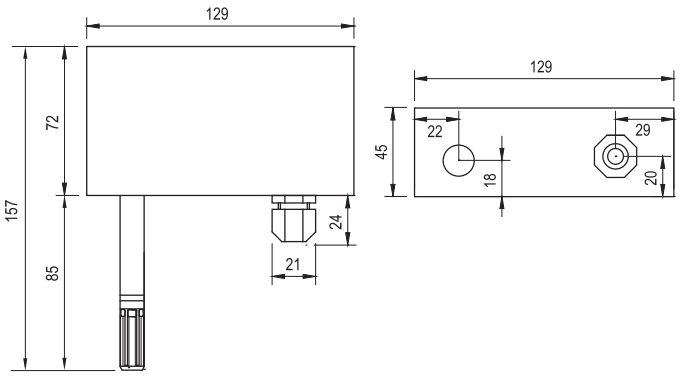

HF4X wall version

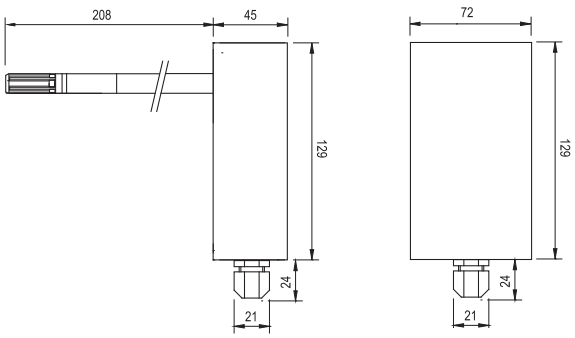

HF4X duct version (vertical mounting)

Order information (for accessories see pages 99-102)									
Transmitters with analog output signals									
Power supply and output signal type									
HF420-									2- or 2 x 2-wire, ‹10...28 VDC, common V+, 4...20 mA (Only display without backlight possible)
HF431-									3/4-wire, 15...40 VDC / 12...28 VAC, 0...20 mA
HF432-									3/4-wire, 15...40 VDC / 12...28 VAC, 4...20 mA
HF433-									3/4-wire, 5...40 VDC / 5...28 VAC, 0...1 V
HF434-									3/4-wire, 10...40 VDC / 8...28 VAC, 0...5 V
HF435-									3/4-wire, 15...40 VDC / 12...28 VAC, 0...10 V
Instrument type									
	D				**X**				Duct probe Ø 15 x 208 mm
	W								Wall probe, Ø 15 x 85 mm
Output parameters									
		B					**X**	**X**	Humidity & temperature
		H	**X**	**X**			**X**	**X**	Only humidity
		T					**X**	**X**	Only temperature
		A							Temperature & dew point
Scaling of the output signals * (humidity: always 0...100 %rh)									
			X	**X**					No temperature output signal
			1	**X**					0...50 °C
			2	**X**					10...40 °C
			3	**X**					-40...60 °C
			4	**X**					-30...70 °C
			5	**X**					-40...85 °C
			6	**X**					0...100 °F
			7	**X**					0...200 °F
			9	**X**					-50...200 °F
Optional display									
					D				Display with backlight (only for horizontal mounting)
					X				No display
Electrical connections (analogue signals to terminals)									
						1			M16 x 1.5 cable gland (horizontal, type D with display and type W)
						2			M16 x 1.5 cable gland (vertical, type D without display)
						3			½" conduit adapter (horizontal, type D with display and type W)
						4			½" conduit adapter (vertical, type D without display)
Standard scaling dew point / frost point									
							X	**X**	No calculation
							B	**X**	-50...50 °C
							C	**X**	-50...100 °C
							D	**X**	-50...200 °F

* Others on request

Off-the-shelf types:		
Duct version:	**HF420-DB1XX2XX**	2-wire, → 4...20 mA = 0...100 %rh / 0...50 °C
	HF432-DB1XX2XX	3/4-wire, → 4...20 mA = 0...100 %rh / 0...50 °C
Wall version:	**HF420-WB1XX1XX**	2-wire, → 4...20 mA = 0...100 %rh / 0...50 °C
	HF432-WB1XX1XX	3/4-wire, → 4...20 mA = 0...100 %rh / 0...50 °C

Detailed specifications		
Power supply / Connections	HF42	HF43
Supply voltage	10...28 VDC V min = 10 V + (0.02 x load*)	15...40 VDC / 12...28 VAC
Current consumption	2 x 20 mA	‹50 mA
Electrical connections	Screw terminals and M16 cable gland or ½" conduit adapter	
Humidity measurement	HF42	HF43
Sensor	ROTRONIC Hygromer® IN-1	
Measurement range	0...100 %rh	
Accuracy at 23 °C	±1.0 %rh	
Repeatability	0.3 %rh	
Long term stability	‹1 %rh/year	
Response time	Typically 10 s for 63% of a change from 35 → 80 %rh (1 m/sec air flow at sensor)	
Temperature measurement	HF42	HF43
Sensor	Pt100 1/3 Class B	
Measurement range	-50...100 °C / -58...212 °F	
Accuracy at 23 °C	±0.2 K	
Repeatability	0.05 °C	
Long term stability	‹0.1 °C/year	
Response time	Typically 4 s for 63 % of a change from 23 to 80 °C (1 m/sec air flow at sensor)	
Calculated parameters	HF42	HF43
Psychrometric calculations	Dew point or frost point	
Start-up time	Typically 3.4 s	Typically 1.9 s
Signal type	4...20 mA	0...20 mA, 4...20 mA, 0...1 V, 0...5 V, 0...10 V Definable by user
*Minimum/Maximum load (in Ω)	0/500 Ω	0/500 Ω (current signal), min. 1000 Ω (voltage signal)
Service interface	UART IO D78F0114H (universal asynchronous receiver transmitter)	
Service cable maximum length	5 m (16.4 ft)	
General specifications	HF42	HF43
Optional display	LCD, 1 or 2 decimals, without backlight	LCD, 1 or 2 decimals, with backlight and trend indicators
Probe material	Polycarbonate	
Filter material	Polyethylene	
Housing material / Protection	ABS / IP 65 (except with USB or Ethernet interface)	
Weight	250 g	
CE/EMC compatibility	EMC Directive 2004/108/EC:	EN 61000-6-1: 2001, EN 61000-6-2: 2005 EN 61000-6-3: 2005, EN 61000-6-4: 2001 + A11
Solder	Lead-free (RoHS-compliant)	
Fire resistance	Conforms to UL94-HB	
FDA/GAMP compatibility	Conforms to 21 CFR Part 11 and GAMP4	
Electronics operating range	-40...60 °C / (models with display: -10...60 °C) 0...100 %rh, non-condensing)	
Temperature limits at probe	-50...100 °C	
Maximum air velocity at probe	20 m/s (7,870 ft /min)	

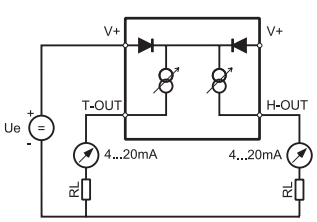

Schematic 2-wire types

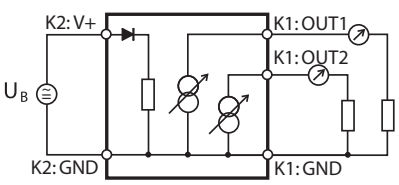

Schematic 3-wire current signal

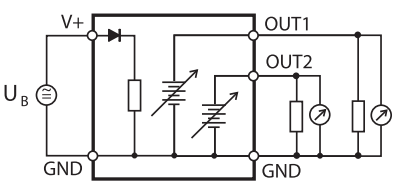

Schematic 3-wire voltage signal

TRANSMITTERS

HygroFlex5 series

The HygroFlex5 series offers you ultimate performance and flexibility thanks to its interchangeable HygroClip2 probes. The transmitters come in wall and duct mount versions. Many useful functions can be accessed with optional HW4 software.

HF5-Series is available with analog and digital outputs, so compatibilty with almost any monitoring or control system is assured. Digital versions may be networked togther to form a dedicated environmental monitoring system using HW4 software.

The new generation device not only has a unique calibration and adjustment process, but also allows probes to be interchanged in just a few seconds. This easy interchangeability during operation reduces down-time and service costs to a huge extent. The possibility of using every probe as a simulator with fixed output values is a big advantage for system validation. In the case of networked devices this can even be carried out online from a remote PC workstation.



Applications

High specification HVAC applications, building management systems, museums, libraries, environmental monitoring systems.

Highlights

- Unique calibration and adjustment process
- Highest reproducibility
- Wall and duct versions; the wall version also serves for the connection of cable based probes
- Many useful functions can be activated with the optional HW4 software

HF5 WALL & DUCT VERSIONS

Applications

HVAC applications, building management systems, museums, libraries, etc.

Highlights and common features

- Probe interchangeable in just a few seconds
- Measures relative humidity, temperature and dew/frost point
- Calculates all psychrometric values
- Range of application -40...60 °C; -10...60 °C with LCD, 0...100 %rh
- Automatic sensor test & drift compensation *
- Use as a simulator for system validation *
- UART service interface
- Precision: dependent on the probe and adjustment profile used
- Can be mounted on a DIN rail (see accessories, page 102)
- Suitable probes: all HygroClip2 (HC2x) probes (ordered separately)
- Includes flange for duct mounting

Wall version	HF52-W series	HF53-W series
Type	2- or 2 x 2-wire	3/4-wire
Signals	Signals freely scalable*	Signals freely selectable and scalable*
Features	Alarm indicators, display and keypad (optional) Optional USB & RS485 interface	

Duct version	HF520-D series	HF53x-D series
Type	2- or 2 x 2-wire	3/4-wire
Signals	Signals freely scalable*	Signals freely selectable and scalable*
Features	Alarm indicators, display and keypad (optional)	

* Optional, requires HW4 software

Note: Version without display for vertical mounting



Wall version
Type W



Duct version vertical mounting
Type D



Duct version horizontal mounting
Type D

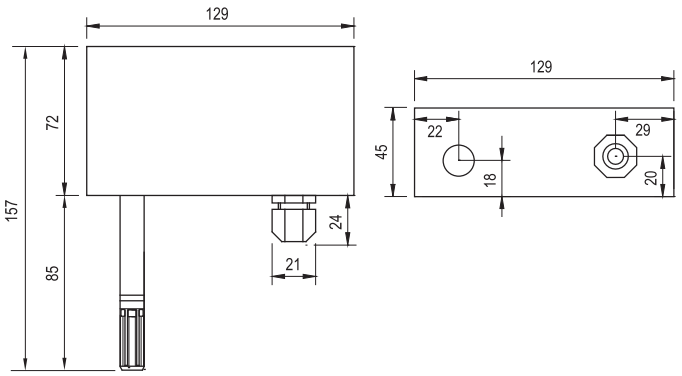

HF5x wall version

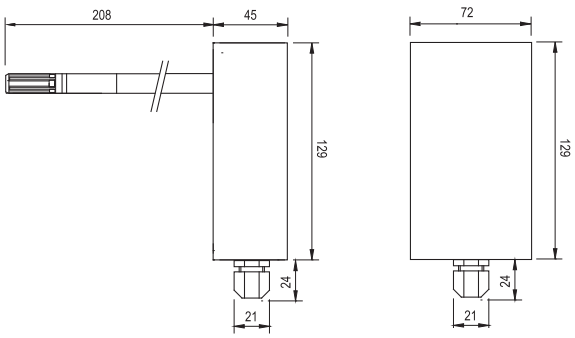

HF5x duct version (vertical mounting)

Order information (for accessories see pages 99-102)									
HF5 transmitters with analog signals									
Power supply and output signal type									
HF520-									2- or 2 x 2-wire, <10...28 VDC common supply V+, 4...20 mA
									Only display without backlight possible
HF531-									3/4-wire (15...40 VDC / 12...28 VAC, 0...20 mA)
HF532-									3/4-wire (15...40 VDC / 12...28 VAC, 4...20 mA)
HF533-									3/4-wire (5...40 VDC / 5...28 VAC, 0...1 V)
HF534-									3/4-wire (10...40 VDC / 8...28 VAC, 0...5 V)
HF535-									3/4-wire (15...40 VDC / 12...28 VAC, 0...10 V)
Instrument type									
	D				**X**				Duct mount , Ø 15 x 208 mm
	W								Wall mount
Output parameters *									
		B					**X**	**X**	Humidity & temperature
		H	**X**	**X**			**X**	**X**	Only humidity
		T					**X**	**X**	Only temperature
		1	**X**	**X**					Humidity & dew point
		A							Temperature & dew point
		C							Temperature & wet bulb temperature (Tw) in °C
		D							Temperature & enthalpy (H) in kJ/kg
		E							Temperature & specific humidity (Q) in g/kg
		F							Temperature & absolute humidity (Dv) in g/m3
		G							Temperature & mixing ratio (R) in g/kg
Further calculations are possible. Please consult our price list in this regard.									
Scaling of the output signals * (humidity: always 0...100 %rh)									
			X	**X**					No temperature output signal
			1	**X**					0...50 °C
			2	**X**					10...40 °C
			3	**X**					-40...60 °C
			4	**X**					-30...70 °C
			5	**X**					-40...85 °C
			6	**X**					0...100 °F
			7	**X**					0...200 °F
			8	**X**					0...300 °F
			9	**X**					-50...200 °F
Optional display									
					D				Display with backlight (only for horizontal mounting)
					X				No display
Electrical connections (analogue signals to terminals) & interfaces									
						1			M16 x 1.5 cable gland, only analogue signals, horizontal mounting
						2			M16 x 1.5 cable gland, vertical mounting without display, only analogue signals
						7			M16 x 1.5 & USB & RS485, communication interface, horizontal mounting
Scaling of the calculated output parameters *									
							X	**X**	No calculation
							B	**X**	-50...50
							C	**X**	-50...100
							D	**X**	-50...200

* Others on request

Detailed specifications		
Power supply / Connections	HF52	HF53
Supply voltage	10...28 VDC, 4...20 mA current loop V min = 10 V + (0.02 x load*)	15...40 VDC /12...28 VAC at 500 Ω
Current consumption	2 x 20 mA	‹50 mA
Electrical connections	Screw terminals and M16 cable gland or ½" conduit adapter	
Humidity measurement	HF52	HF53
Sensor	ROTRONIC Hygromer® IN-1 (depending on the HygroClip2 used)	
Measurement range	0...100 %rh	
Accuracy at 23 °C	± 0.8 %rh (probe dependent)	
Repeatability	0.3 %rh	
Long term stability	‹1 %rh/year	
Response time	Typically 10 s for 63 % of a jump 35 → 80 %rh (1 m/sec air flow at sensor)	
Temperature measurement	HF52	HF53
Sensor	Pt100 1/3 Class B (in all HygroClip2 probes)	
Measurement range	-100...200 °C / -148...392 °F	
Accuracy at 23 °C	±0.1 K (probe dependent)	
Repeatability	0.05 °C	
Long term stability	‹0.1 °C/year	
Response time	Typically 4 s for 63 % of a change from 23 to 80 °C (1 m/sec air flow at sensor)	
Calculated parameters	HF52	HF53
Psychrometric calculations	All types available	
Start-up time	Typically 3.4 s	Typically 1.9 s
Signal type (selectable by jumper)	4...20 mA	0...20 mA, 4...20 mA , 0...1 V, 0... 5 V, 0...10 V
Scale limits	-999.99...+9999.99 units, user scaleable	
* Maximum load (in Ω)	0/500 Ω	0/500 Ω (current signal), min. 1000 Ω (voltage signal)
Type of interface	USB or Ethernet TCP/IP (cable connection or wireless) & RS485	
Service interface	UART (universal asynchronous receiver transmitter) on mini USB connector	
Service cable maximum length	5 m (16.4 ft)	
Optional display	LCD, 1 or 2 decimals, without backlight	LCD, 1 or 2 decimals, with backlight and trend indicator
Probe material	Polycarbonate	
Filter material	Polyethylene	
Housing material / Protection	ABS / IP 65 (except for models with USB interface)	
Weight	Approx. 250 g	
CE/EMC compatibility	EMC Directive 2004/108/EC	EN 61000-6-1: 2001, EN 61000-6-2: 2005 EN 61000-6-3: 2005, EN 61000-6-4: 2001 + A11
Solder	Lead free (RoHS-compliant)	
Fire resistance	Conforms to UL94-HB	
FDA/GAMP compatibility	Conforms to FDA 21CFR Part 11 and GAMP4	
Electronics operating range	-40...60 °C / (models with display: -10...60 °C) 0...100 %rh, non-condensing	
Maximum wind velocity at probe	40 m/s (7,870 ft/min)	

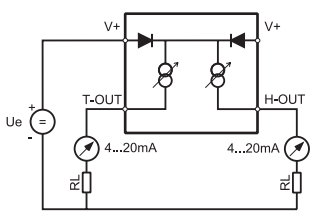

Schematic 2-wire types

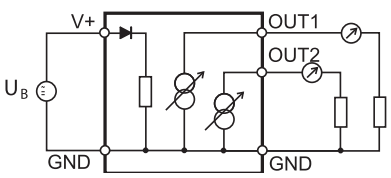

Schematic 3-wire current signal

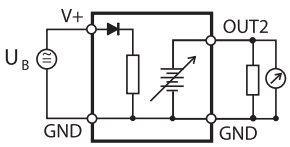

Schematic 3-wire voltage signal

TRANSMITTERS



HygroFlex6 series

HygroFlex6 series provides the highest specification and widest range of configurations for industrial applications. The transmitters come in wall, cable and duct versions. Many useful functions can be activated with the optional HW4 software. The measuring circuits of the HF6x series are galvanically isolated.

This new instrument generation not only boasts a unique calibration and adjustment process, but also allows every transmitter to be used as a simulator with fixed values. This is a big advantage for system validation. In the case of networked transmitters this can even be done online from a PC running ROTRONIC HW4 software.

Applications

HVAC applications, building management systems, museums, libraries, etc.

Highlights

- Unique calibration and adjustment process
- Highest reproducibility
- Wall, duct and cable versions
- Many useful functions can be activated with the optional HW4 software

HF6 WALL/CABLE MOUNT

Applications

HVAC applications, building management systems, museums, libraries, etc.

Highlights and common features

- Measures relative humidity, temperature and dew/frost point
- Electronics operating range -40…60 °C; -10…60 °C with LCD, 0…100 %rh
- Automatic sensor test & drift compensation *
- Saves up to 2,000 measurement pairs *
- Use as a simulator for system validation *
- UART service interface
- Integrated probe
- Adjustment profile «Standard», factory certificate
- Adjusted at 23 °C and 10, 35, 80 %rh
- Accuracy: ±1 %rh / ±0.2 K
- Mains or low voltage power supply

Wall mount	HF624-W series	HF63x-W series
Type	2- or 2 x 2-wire, galvanically isolated	3/4-wire
Signals	Signals freely scalable*	Signals freely selectable and scalable*
Features	Alarm indicators, display and keypad (optional)	
Filter	Polyethylene filter	

Cable mount	HF624-2 series	HF63x-2 series
Type	2- or 2 x 2-wire, galvanically isolated	3/4-wire
Signals	Signals freely scalable*	Signals freely selectable and scalable*
Features	Alarm indicators, display and keypad (optional) PPS probe with 2 m cable	
Filter	Polyethylene filter	

* Optional, requires HW4 software



Wall version
Type W



Cable version
Type 2

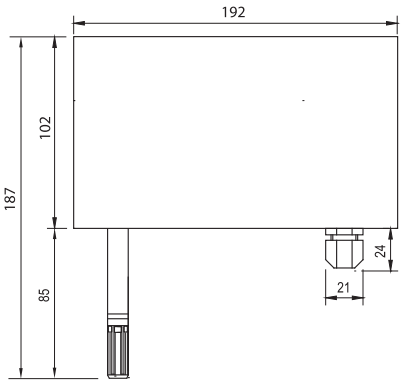

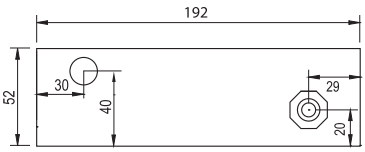

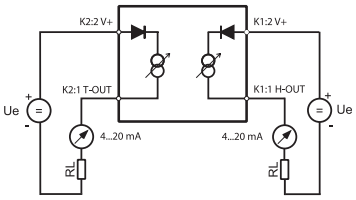

Schematic 2-wire types

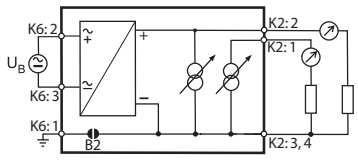

Schematic 3-wire current signal
Low voltage

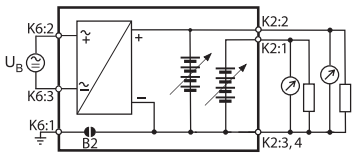

Schematic 3-wire voltage signal
Low voltage



Duct version
Type D



Duct version
Type D

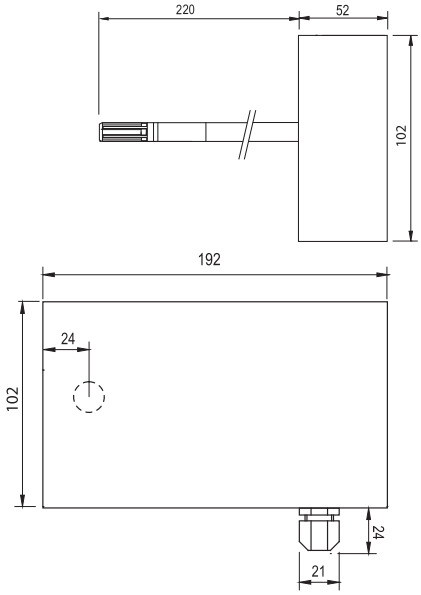

HF6 DUCT MOUNT

Applications

HVAC applications, building management systems etc.

Highlights and common features

- Measures relative humidity, temperature and dew/frost point
- Range of application -40...60 °C, 0...100 %rh
- Automatic sensor test & drift compensation *
- Saves up to 2,000 measurement pairs *
- Use as a simulator for system validation *
- UART service interface
- Integrated probe
- Adjustment profile «Standard», factory adjustment certificate
- Adjusted at 23 °C and 10, 35, 80 %rh
- Accuracy: ±1 %rh / ±0.2 K
- Mains or low voltage power supply

Duct version	HF624-D series	HF63xD series
Type	2- or 2 x 2-wire, galvanically isolated	3/4-wire
Signals	Signals freely scalable*	Signals freely selectable and scalable*
Features	Alarm indicators, display and keypad (optional)	
Filter	Polyethylene filter	

* Optional, requires HW4 software

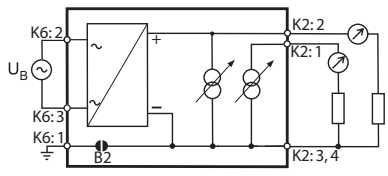

Schematic 3-wire current signal
Mains voltage power supply

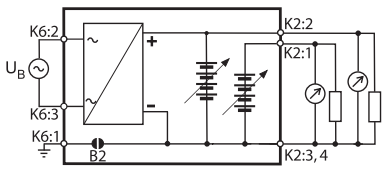

Schematic 3-wire voltage signal
Mains voltage power supply

Order information (for accessories see pages 99-102)										
Transmitters with analog output signals										
Power supply and output signal type										
HF624-										2 x 2-wire, ‹10...28 VDC, galvanically isolated
HF631-										3/4-wire, 15...40 VDC / 12...28 VAC, 0...20 mA
HF632-										3/4-wire, 15...40 VDC / 12...28 VAC, 4...20 mA
HF633-										3/4-wire, 5...40 VDC / 5...28 VAC, 0...1 V
HF634-										3/4-wire, 10...40 VDC / 8...28 VAC, 0...5 V
HF635-										3/4-wire, 15...40 VDC / 12...28 VAC, 0...10 V
HF636-										3/4-wire, 85...265 VAC, 0...20 mA
HF637-										3/4-wire, 85...265 VAC, 4...20 mA
HF638-										3/4-wire, 85...265 VAC, 0...1 V
HF639-										3/4-wire, 85...265 VAC, 0...5 V
HF63A-										3/4-wire, 85...265 VAC, 0...10 V
Instrument type										
	2									PPS cable probe 2 m, Ø 15 x 100 mm
	D									Duct version, Ø 15 x 220 mm
	W									Wall version, Ø 15 x 85 mm
Output parameters										
		P						**X**	**X**	Humidity and passive Pt100
		B						**X**	**X**	Humidity & temperature
		H	**X**	**X**				**X**	**X**	Only humidity
		T						**X**	**X**	Only temperature
		1	**X**	**X**						Humidity & dew point
		A								Temperature & dew point
Scaling of the output signals (humidity: always 0...100 %rh)										
			X	**X**						No temperature output signal
			1	**X**						0...50 °C
			2	**X**						10...40 °C
			3	**X**						-40...60 °C
			4	**X**						-30...70 °C
			5	**X**						-40...85 °C
			6	**X**						0...100 °F
			7	**X**						0...200 °F
			9	**X**						-50...200 °F
		P	**P**	**3**						With passive Pt100 1/3 Class B
		P	**P**	**5**						With passive Pt100 1/5 Class B
		P	**P**	**A**						With passive Pt100 1/10 Class B
Optional display										
					D					Display (only display without backlight possible for HF624)
					X					No display
Probe extension										
						S				Standard length (D = 220 mm, W = 85 mm)
						1				Standard length (S) + 150 mm
						2				Standard length (S) + 300 mm
						3				Standard length (S) + 450 mm
						4				Standard length (S) + 600 mm
Electrical connections (analog signals to terminals) *										
							1			M16 x 1.5 cable gland (horizontal, type D with display and type W)
							3			x ½" conduit adapter (horizontal, type D with display and type W)
Standard scaling dew point / frost point										
								X	**X**	No calculation
								B	**X**	-50...50
								C	**X**	-50...100
								D	**X**	-50...200

*Types with mains voltage have 2 M16 cable glands or conduit adapters

Detailed specifications		
Power supply / Connections	HF62	HF63
Supply voltage		
	10...28 VDC, 4...20 mA current loop V min = 10 V + (0.02 x load*) * = resistance in Ω	15...40 VDC / 12...28 VAC at 500 Ω 85...265 VAC
Current consumption	2 x 20 mA , 4...20 mA current loop	‹50 mA
Electrical connections	Screw terminals and M16 cable gland or ½" conduit adapter	
Humidity measurement	HF62	HF63
Sensor	ROTRONIC Hygromer® IN-1	
Measurement range	0...100 %rh	
Accuracy at 23 °C	±1 %rh	
Repeatability	0.3 %rh	
Long term stability	‹1 %rh/year	
Response time	Typically 10 s for 63 % of a change 35 → 80 %rh (1 m/sec air flow at sensor)	
Temperature measurement	HF62	HF63
Sensor	Pt100 1/3 Class B	
Measurement range	-100...150 °C / -148...302 °F	
Accuracy at 23 °C	±0.2 K	
Repeatability	0.05 K	
Long term stability	‹0.1 °C/year	
Response time	Typically 4 s for 63 % of a change from 23 to 80 °C (1 m/sec air flow at sensor)	
Calculated parameters	HF62	HF63
Psychrometric calculations	Dew point or frost point	
Start-up time and refresh rate	HF62	HF63
Start-up time	Typically 3.4 s	Typically 1.9 s
Signal type	4...20 mA	0...20 mA, 4...20 mA / 0...1 V, 0...5 V, 0...10 V
Scale limits	-999.99 ... +9999.99 units, user programmable	
* Maximum load (in Ω)	0/500 Ω	0/500 Ω (current signal), min. 1000 Ω (voltage signal)
Service interface	UART (universal asynchronous receiver transmitter)	
Service cable maximum length	5 m (16.4 ft)	
General specifications	HF62	HF63
Optional display	LCD, 1 or 2 decimals, without backlight	LCD, 1 or 2 decimals, with backlight and trend indicator
Probe material	Polycarbonate	
Filter material	Polyethylene depending on filter, order separately, see pages 99/100	
Housing material / Protection	ABS / IP 65	
Weight	Approx. 300 g	
CE/EMC compatibility	EMC Directive 2004/108/EC: EN 61000-6-1: 2001, EN 61000-6-2: 2005 EN 61000-6-3: 2005, EN 61000-6-4: 2001 + A11	
Solder	Lead free (RoHS compliant)	
Fire resistance	Conforms to UL94-HB	
FDA/GAMP compatibility	Conforms to 21 CFR Part 11 and GAMP4	
Electronics operating range	-40...60 °C / -10...60 °C (models with display); 0...100 %rh, non-condensing	
Temperature limits at probe	-100...150 °C (applies to cable and duct models)	
Maximum air velocity at probe	40 m/s (7,870 ft /min)	

TRANSMITTERS

HygroFlex7 series

The HygroFlex7 series is equipped with sturdy metal housings and stainless steel probes for harsh industrial conditions. In common with other HygroFlex transmitters, the HF7 provides superb accuracy and reproducibity and comes in wall, cable and duct mount versions. Many useful features can be activated with the optional HW4 software, including in-transmitter logging, output scaling and self-diagnostics.

The HF7 series not only has a unique calibration and adjustment process, but also allows every transmitter to be used as a simulator with fixed values. This is a major advantage in system configuration and validation.

Applications

Industrial applications, building management systems, underground railways, tunnelling, etc.

Highlights

- Unique calibration and adjustment process
- Highest reproducibility
- All metal construction of wall, cable and duct versions
- Highly configurable via HW4 software



HF7 WALL/CABLE VERSION



Wall version
Type W

Applications

Industrial processes in harsh environments

Highlights and common features

- Measures relative humidity, temperature and dew/frost point
- Application range -100...150 °C / 0...100 %rh (depending on model)
- Automatic sensor test & drift compensation *
- Integral 2,000 measurement pair logging *
- Use as a simulator for system validation *
- UART service interface
- Fixed probe/cable probe
- Adjustment profile «Standard», factory certificate
- All metal construction
- Accuracy: ±1 %rh / ±0.2 K



Cable version
Type C

Wall version	HF720-W series	HF73x-W series
Type	2- or 2 x 2-wire, 4...20 mA	3/4-wire
Signals	Signals freely scalable*	Signals freely selectable and scalable*
Features	Without display	Without display
Filter carrier	Slotted sleeve (order filter separately)	

Cable version	HF720-C series	HF73x-C series
Type	2- or 2 x 2-wire, 4...20 mA	3/4-wire
Signals	Signals freely scalable*	Signals freely selectable and scalable*
Features	Without display	
Filter carrier	Slotted sleeve (order filter separately)	

* Optional, requires HW4 software

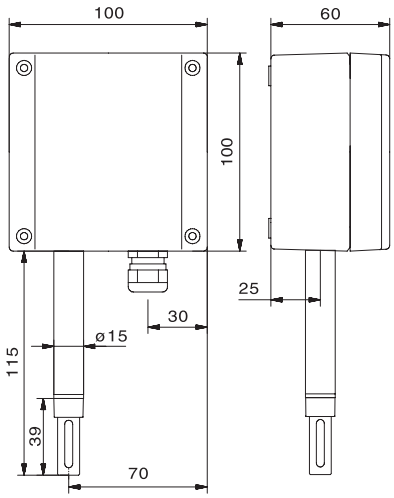

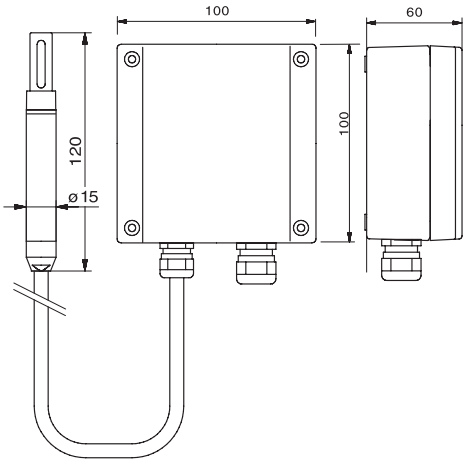

HF7 DUCT VERSION

Applications

Industrial processes in harsh environments



Highlights and common features

- Measures relative humidity, temperature and dew/frost point
- Application range -100...100 °C, 0...100 %rh
- Automatic sensor test & drift compensation *
- Integral 2,000 measurement pair logging *
- Use as a simulator for system validation *
- UART service interface
- Integrated probe Ø 15 x 200 mm
- Adjustment profile «Standard», factory adjustment certificate
- All metal construction
- Accuracy: ±1 %rh / ±0.2 K

Duct version	HF720-D series	HF73x-D series
Type	2- or 2 x 2-wire, 4...20 mA	3/4-wire
Signals	Signals freely scalable*	Signals freely selectable and scalable*
Filter carrier	Slotted sleeve (order filter separately)	

* Requires HW4 software

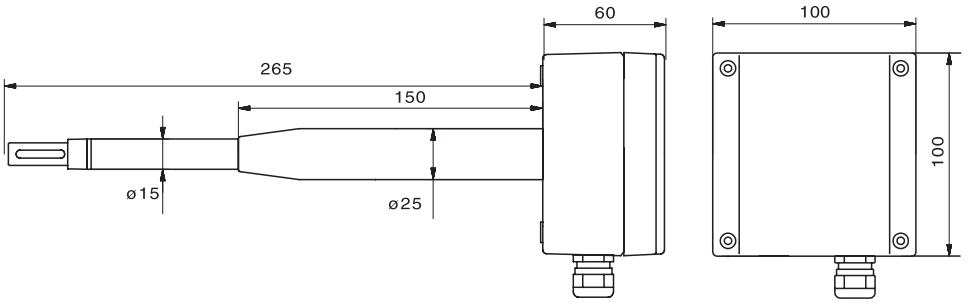

Duct version
Type A

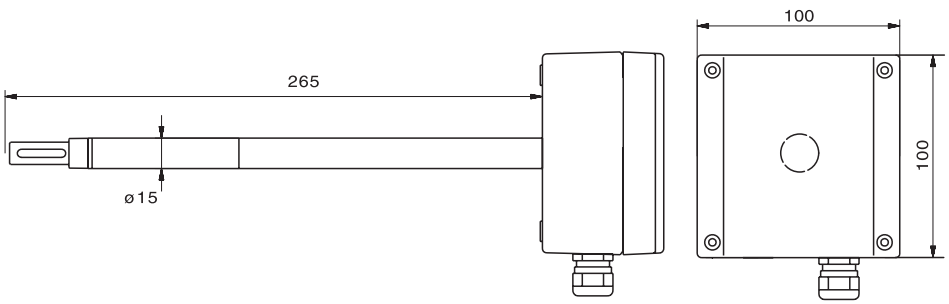

Duct version
Type D

Order information (for accessories see pages 99-102)											
Transmitters with analogue output signals											
Power supply and output signal type											
HF720-											2 x 2-wire, ‹10...28 VDC, 4...20 mA
HF731-											3/4-wire, 15...40 VDC / 12...28 VAC, 0...20 mA
HF732-											3/4-wire, 15...40 VDC / 12...28 VAC, 4...20 mA
HF733-											3/4-wire, 5...40 VDC / 5...28 VAC, 0...1 V
HF734-											3/4-wire, 10...40 VDC / 8...28 VAC, 0...5 V
HF735-											3/4-wire, 15...40 VDC / 12...28 VAC, 0...10 V
Instrument type											
	N										Steel cable probe Ø 15 x 120 mm, 2 m
	D										Steel duct probe Ø 15 x 265 mm (standard)
	A										Steel duct probe, Ø 25/15 x 265 mm (standard)
	W										Steel wall probe Ø 15 x 115 mm (standard)
Output parameters											
		B									Humidity & temperature
		H									Only humidity
		T									Only temperature
		1									Humidity & dew point
		A									Temperature & dew point
Scaling of the output signals (humidity: always 0...100 %rh)											
			X	**X**							No temperature output signal
			1	**X**							0...50 °C
			2	**X**							10...40 °C
			3	**X**							-40...60 °C
			4	**X**							-30...70 °C
			5	**X**							-40...85 °C
			6	**X**							0...100 °F
			7	**X**							0...200 °F
			9	**X**							-50...200 °F
Optional display											
					X						No display
Probe extension (duct and cable probes)											
						S					Standard length (N = 120 mm, D/A 265 mm, W = 115 mm)
						1					Standard length (S) + 150 mm
						2					Standard length (S) + 300 mm
						3					Standard length (S) + 450 mm
						4					Standard length (S) + 600 mm
Electrical connections (analogue signals to terminals)											
							1				M16 x 1.5 cable gland
							3				½" conduit adapter
Standard scaling dew point / frost point											
								X	**X**		No calculation
								B	**X**		-50...50
								C	**X**		-50...100
								D	**X**		-50...200

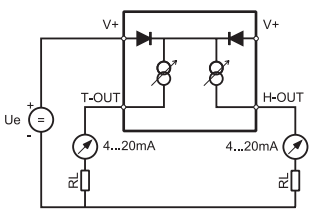

Schematic 2-wire types

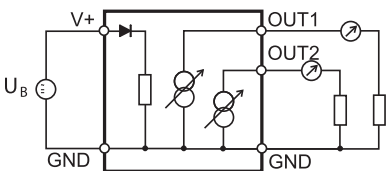

Schematic 3-wire current signal

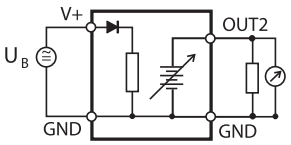

Schematic 3-wire voltage signal

Detailed specifications		
Power supply / Connections	HF72	HF73
Supply voltage		
	10...28 VDC , 4...20 mA current loop V min = 10 V + (0.02 x load*)	5, 10, 15...40 VDC / 5, 8, 12...28 VAC
Current consumption	2 x 20 mA, 4...20 mA current loop	‹50 mA
Electrical connections	Screw terminals and M16 cable gland or ½" conduit adapter	
Humidity measurement	HF72	HF73
Sensor	ROTRONIC Hygromer® IN-1	
Measurement range	0...100 %rh	
Accuracy at 23 °C	±1 %rh	
Repeatability	0.3 %rh	
Long term stability	‹1 %rh/year	
Response time	Typically 10 s for 63% of a change from 35 → 80 %rh (1 m/sec air flow at sensor)	
Temperature measurement	HF72	HF73
Sensor	Pt100 1/3 Class B	
Measurement range	-100...150 °C / -148...302 °F	
Accuracy at 23 °C	±0.2 K	
Repeatability	0.05 K	
Long term stability	‹0.1 °C/year	
Response time	Typically 4 s for 63% of a jump from 23 to 80 °C (1 m/sec air flow at sensor)	
Calculated parameters	HF72	HF73
Psychrometric calculations	Dew point or frost point	
Start-up time and refresh rate	HF72	HF73
Start-up time	Typically 3.4 s	Typically 1.9 s
Signal type	4...20 mA	0...20 mA, 4...20 mA / 0...1 V, 0...5 V, 0...10 V
Scale limits	-999.99...+9999.99 user scaleable units	
*Maximum load (in Ω)	0/500 Ω	0/500 Ω (current signal), min. 1000 Ω (voltage signal)
Service interface	UART (universal asynchronous receiver transmitter)	
Service cable maximum length	5 m (16.4 ft)	
General specifications	HF72	HF73
Probe material	Stainless steel V2A / 1.4305 / AISI 302	
Filter material	Depending on filter, order separately, see pages 99/100	
Housing material / Protection	IP 65 aluminium diecast	
Weight	Approx. 800 g + 140 g per probe extension unit	
CE/EMC compatibility	EMC Directive 2004/108/EC: EN 61000-6-1: 2001, EN 61000-6-2: 2005 EN 61000-6-3: 2005, EN 61000-6-4: 2001 + A11	
Solder	Lead-free (RoHS-compliant)	
Fire resistance	Incombustible	
FDA/GAMP compatibility	Conforms to FDA 21 CFR Part 11 and GAMP4	
Electronics operating range	-50...100 °C / 0...100 %rh, non-condensing	
Temperature limits at probe	-100...150 °C (applies to cable and duct models)	
Maximum air velocity at probe	40 m/s (7,870 ft/min)	

TRANSMITTERS

HygroFlex & HygroClip-EX

HygroFlex series may be used together with the intrinsically safe HygroClip-EX probes. The relative humidity and temperature can be displayed and output as analog signals. Calculated psychrometric values such as dew point or mixing ratio can also be derived with the HTS3 models and output as a linearized analog signal.

Applications

Humidity and temperature measurement in industrial processes in ATEX rated (EX) zones

Highlights

- Interchangeable probe
- Up to 3 analog output signals
- Automatic load compensation



HTS Series



Applications

Humidity measurement in industrial processes in EX zones

Highlights and common features

- Interchangeable probe
- Measures relative humidity & temperature
- Electronics operating range -40...60 °C; -10...60 °C with LCD, 0...100 %rh
- Service interface
- Accuracy: ±1 %rh / ±0.2 K
- Suitable probes: all HygroClip Ix-EX with Tuchel connector plug



Wall version	HTS1	HTS3
Voltage	Low voltage or mains voltage power supply (see order information)	
Outputs	2 signals freely selectable and scalable*	3 signals freely selectable and scalable*
Features	Alarm indicators, display and keypad (optional)	

* Optional, requires HW4 software

For detailed information visit www.rotronic-humidity.com

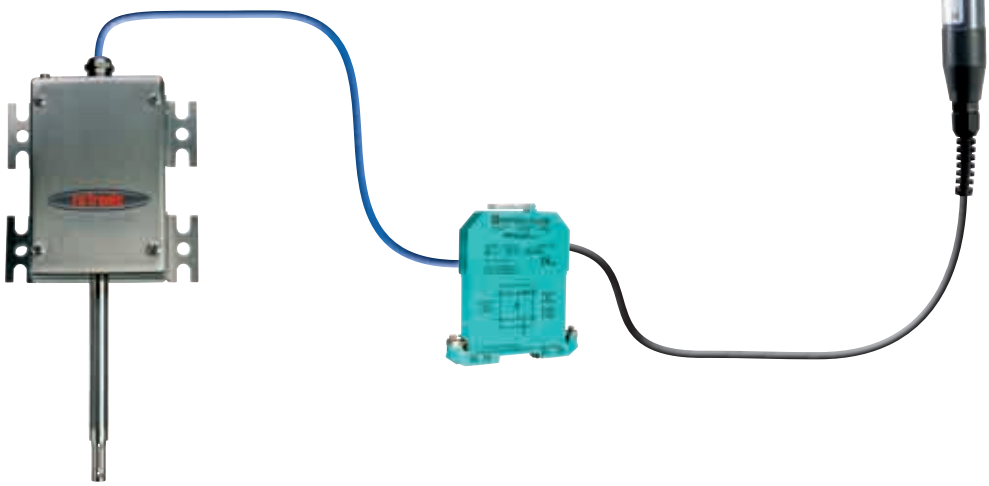

Order information						
HTS						Transmitter with ABS housing
HTM						Transmitter with metal housing
	1					1, 2 x 4...20 mA analog signals
	3					3 x 4...20 mA analog signals & digital interface
		1				12...35 VDC / 12...24 VAC power supply
		2				90...230 VAC power supply
			D			With display
			X			Without display
				E		With Ethernet interface (only HTS3x)
					/9	Customised version

HygroClip-EX probes



HygroClip IC-EX



HygroClip IE-1-EX



HygroClip IW-EX



Hygroclip ID-EX

Applications

Humidity measurement in industrial processes in ATEX rated (EX) zones, compatible with HygroFlex HTS transmitters

Highlights and common features

- Intrinsically safe probe ATEX 100
- Power supply via HygroFlex transmitter (15 VDC), or from 2 wire 4...20mA loop (RH or °C only)
- Measures relative humidity and temperature
- Electronics operating range -40...40 °C. Temperature measurement range -50...200 °C (at probe)
- Accuracy: ± 1% rh / ±0.3 K

Order code	HygroClip IC1-EX	HygroClip IC3-EX
Type	Cable probe	
Probe length	120 mm	270 mm
Cable length	2 m	
Housing	Chrome nickel steel, V4A/AISI 316/1.4401	

Order code	HygroClip IE1-EX	HygroClip IE3-EX
Type	Screw-in probe	
Thread	½" G	½" NPT
Cable length	2 m	
Housing	Chrome nickel steel, V4A/AISI 316/1.4401	

Order code	HygroClip IW-EX	HygroClip ID-EX
Type	Wall probe	Duct probe
Probe length	150 mm	250 mm
Housing	Chrome nickel steel, V4A/AISI 316/1.4401	

Order information for accessories	
AC1617-ZB/XXX	Connection cable HygroFlex ‹› Zener barrier XXX = cable length in m. For XXX = 02, 05, 10, 15, in 5 m steps, max. 200 m
ZB1	Zener barrier Z722, use with HygroFlex
ZB1-420	Zener barrier Z788, use without HygroFlex, 4...20 mA, 2-wire
ZB2	Zener barrier Z722 in IP 67 housing, with space for 4 Zener barriers

Applications

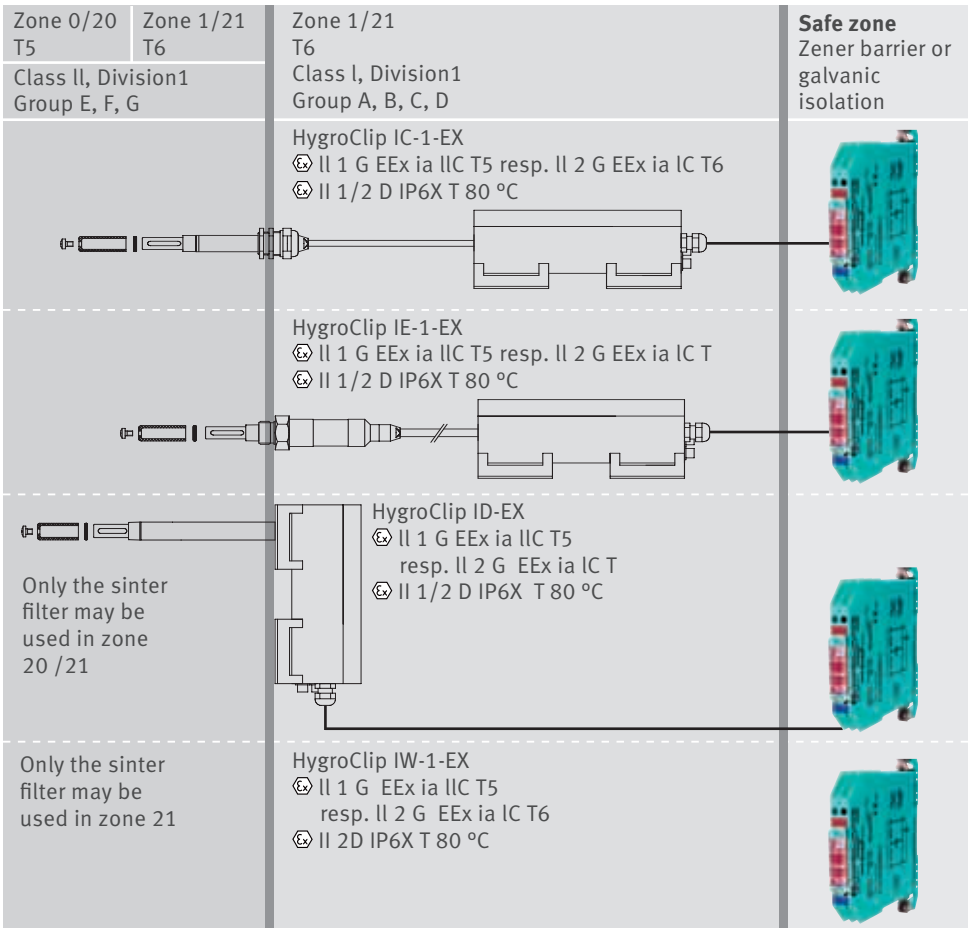

ATEX 2180

Note: The total cable length between HygroClip-EX probe and HygroFlex transmitter may not exceed 200 m.

HygroClip-EX probes may NOT be calibrated in the EX zone because the accessories are not EX-compliant.

Specifications HygroClip-EX probes				
Feature	Type ID-EX	Type IW-EX	Type IC-x-EX	Type IE-x-EX
Humidity measurement range	0...100 %rh			
Range of application	Electronics: -40...40 °C; 0...100 %rh, temperature at probe: max. -50...200 °C			
Accuracy at 23°C	±1 %rh, ±0.2 K			
Reproducibility	‹0.5 %rh, 0.1 °C			
Response time	‹15 s at 1 m/s air velocity at 23 °C			
Long term stability	‹1 %rh, 0.1 °C per year			
Sensors	Humidity: Hygromer® IN-1; temperature: Pt100 1/3 DIN			
Adjustment points	Digital adjustment, 1...4 points humidity, 2 points temperature			
Output signals & load	Digital, analog 4...20 mA / Max. 800 Ω at 26 VDC			
Power supply	4...20 mA in two-wire circuit, via Zener barrier			
Housing / Protection	Stainless steel V4A/AISI 316/1.4401, 150 x 100 x 58 mm / IP 66			
Probe dimensions in mm (other lengths possible)	Ø 15 x 250	Ø 15 x 150	IC-1-EX: Ø 15 x 120 IC-3-EX: Ø 15 x 270	142 x 25 mm x 1/2" Wrench size 27 mm
Electrical connection	Cable gland / Terminal block			
EC approval & marking	PTB 01 ATEX 2180			
FM approval & marking	3015571 / IS / I, II, III / 1 / ABCDEFG / T6 – 12.0724.0006 IP66			

Specifications HTS series		
Feature	HTS1	HTS3
Probe connections	1	1 (+1 optional), order number /9
Signal inputs	Digital or ROTRONIC analog: 0...2.5 V, 10 Bit A/D, power supply: 15 V DC, max. 10 mA	
Input for third-party probe (1 analog)	No	Yes. Input impedance third-party probe ›1 MΩ
Analog outputs	2 scalable	3 scalable
Output configuration	Out 1 = %rh / Out 2 = °C	Out 1 = %rh / Out 2 = °C / Out 3 = calculation
Output signals (selectable by jumper)	0...1 V, 0...5 V, 0...10 V, 0...20 mA, 4...20 mA	
RS232 interface internally configurable	No	Yes
RS485-networkable (up to 32 devices)	No	Yes
Scalable input/output	-999...9999 user scaleable	-999...9999 user scaleable
Probe adjustment:		
4 points %rh, 1 point (°C)	Yes, with optional display/keypad fitted	
4 points %rh, 2 points (°C), via PC	No	Yes
Psychrometric calculations	None	All available
Pressure compensation calculated values	None	Manually or automatically with pressure probe (option)
Measurement range	Probe-dependent, max. 0...100 %rh, -50...200 °C, 0...2000 hPa	
Electronics operating range	0...100 %rh (non-condensing), -40...60 °C, with display -30...60 °C	
Display/Keypad (option)	LCD display with 3 lines, foil keypad	
Display resolution (option)	0.1 %rh, 0.1 °C, 0.01 for calculated values	
Housing material, dimensions	ABS, 207 x 150 x 58, 3 mm (metal housing: optional)	
Protection	IP 65/NEMA4	
Weight	Approx. 310 g	
Supply voltage	12...35 V DC (140 mA), 12...24 V AC or 90...250 V AC, 3.5 VA	
Cable connection / Connection terminals	M16 cable gland (7 mm cable) / 18 AWG	
Analog outputs (factory setting 4...20 mA)	Current outputs (0/4...20 mA), max. load 500 Ω, other output ranges selectable by jumper; voltage outputs (0...1, 5, 10 V), min. load 1000 Ω Automatic load compensation	
CE conformity	Conforms to EN61000-6-2:2001, EN61000-6-4: 2001	

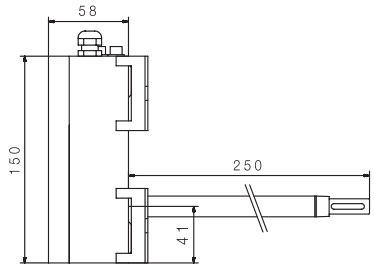

Duct probe

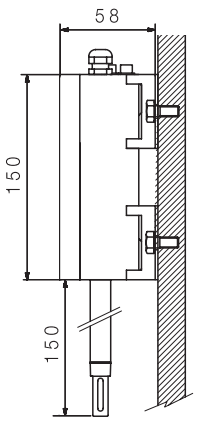

Wall probe

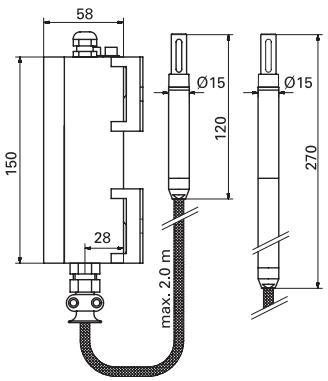

Cable probe

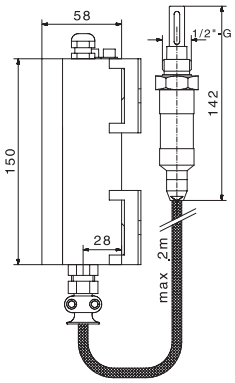

Screw-in probes

HANDHELD DEVICES

HygroPalm series

The ROTRONIC HygroPalm handheld instrument of the AirChip3000 generation are the perfect instruments for climatic measurements. They are extremely precise and feature many practical functions, but are easy to use.

HygroPalms are adjusted and configured during production and are therefore ready for immediate use. They can be configured for specific applications with user-friendly HW4 software or directly on the keypad. A large range of interchangeable probes enables easy and flexible use, straightforward maintenance and simple calibration.

The HP23 version can be used for the in-situ adjustment of transmitters and for system validation.

See the chapter on HygroClip2 probes on pages 6 - 12 for suitable probes.

Applications

For HVAC technicians and inspectors, the pharmaceutical industry, building management systems, the paper industry, research and many others.

Highlights

- Measures humidity, temperature and dew/frost point
- Calculates absolute humidity
- Range of use 0...100 %rh / -10...60 °C
- UART interface
- Battery charge monitor
- Trend indicator



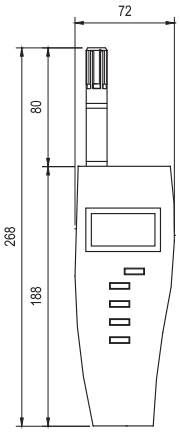



HygroPalm21

Order code HP21

- Fixed probe
- Application range: 0...100 %rh / -10...60 °C
- Saves up to 2,000 measurement pairs
- Measures humidity, temperature and calculates dew/frost point
- Polyethylene filter (other filters see page 99)
- Adjustment profile «Standard», factory certificate
- Adjusted at 23 °C and 10, 35, 80 %rh
- Accuracy: ±1 %rh / ±0.2 K
- Very fast response time thanks to new HygroMer M3-R sensor τ63 ‹3 s

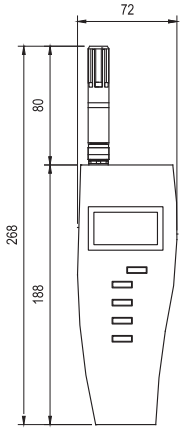



HygroPalm22

Order code HP22

Specifications as HP21 plus:

- Interchangeable probes
- Instrument operating range 0...100 %rh / -10...60 °C
- Saves up to 2,000 measurement pairs
- Measurement range 0...100%rh, -100...200 °C (probe-dependent)
- All psychrometric calculations available
- Adapter for Pt100 temperature probes (see page 75)
- Probe to be ordered separately

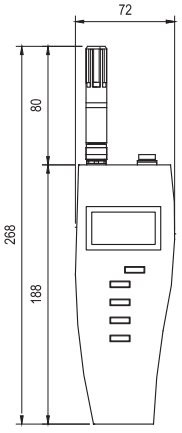



HygroPalm23

Order code HP23

- 2 interchangeable probe inputs
- 2 analogue inputs for 0...1 VDC or 0(4)...20 mA
- 9 V battery, rechargeable option
- All psychrometric calculations available
- Real-time clock with back-up battery
- Probe adjustment direct to dew point reference
- Instrument operating range 0...100 %rh / -10...60 °C
- Measurement range 0...100%rh, -100...200 °C (probe dependent)
- Saves up to 16,000 measurement pairs: every data record contains humidity, temperature, data, time, batch no. and user ID no.
- Remote control function for transmitters
- Mini USB interface for connection to PC

Available from spring 2009

Specifications HygroPalm series			
Feature	HP21	HP22	HP23
Humidity / Temperature sensor	Hygromer® M3-R Pt100 1/3 DIN	Depending on probe	
Probe type	Integrated	HygroClip®2	HygroClip®2 or analogue
Number of probe inputs	N/A	1	2
Measurement range	0…100 %rh / -10…60 °C	Probe dependent	
Accuracy at 23 ± 5 °C	±1 %rh / ±0.2 K	Depending on probe used (0.8 %rh, 0.1K)	
Reproducibility	‹0.02 %rh / 0.01 K		
Long term stability	Better than 1 %rh / year		
Response time humidity sensor t 63	‹3 s	Depending on sensor used, ‹3…‹15 s	
Initialization time	‹2 s		
Electronics operating range	0…100 %rh / -10…60 °C		
Display resolution	3 decimals		
Display illumination	Yes		
Alarm indicators	Yes		
Battery charge indicator	«Low Battery» indicator		Battery status indicator
Real-time clock with back-up battery	No	No	Yes
Functions			
Trend indicator	Yes		
Probe adjustment with software	1 point & multi-point %rh & °C, with service cable		
Probe adjustment with keys	1 point %rh & °C	1 point & multi-point %rh & °C	
Probe adjustment with dew point reference	No		Yes
Psychrometric calculations	Dew point	All psychrometric calculations available	
Data logging	2000 %rh/°C measurement pairs		16,000 data records in ASCII mode
Event logging	Yes		
User information	Via service cable & HW4 software		
Device lock (password-protected)	Via service cable & HW4 software		
Sensor diagnostics (drift, status)	Via service cable & HW4 software		
Service information	Scheduled calibration		
Audit trail/Electronic records	Conforms to FDA 21CFR Part 11 and GAMP		
Electrical specifications			
Power supply	9 V battery or rechargeable battery		
Rechargeable battery charge	No		Yes
Current consumption (without backlight)	~5 mA	~6 mA	~10 mA
Supply for third-party probe	No	No	Yes, battery voltage
Communication interfaces	Via service cable		Mini USB
Service interface	UART		
Maximum length service cable	5 m		
Mechanical specifications			
Housing material	ABS		
Sensor protection	Polyethylene filter	Depending on probe used	
Dimensions	274 x 72 x 35 mm	196 x 72 x 35 mm	
Weight	Approx. 300 g		
Standards	EN 61000-6-4 & EN 61000-6-2		
FDA / GAMP compatibility, audit trail	Conforms to FDA 21 CFR Part 11 and GAMP4		
IP protection	IP 40		

HANDHELD DEVICES

Measuring devices for the paper industry

The GTS is a classic ROTRONIC product that has been produced for many years. It was developed specifically for measurement of equilibrium relative humidity in stacks of paper and cardboard. Its robust design together with updated electronics make the GTS the most popular instrument for humidity measurements in stacks of paper and cardboard.



Applications

For paper technicians, printers, merchants and printing equipment service engineers for ERH measurements in stacks of paper and card

Highlights

- Fixed sword probe for equilibrium humidity and temperature
- Sturdy, very robust mechanical components
- Display of equilibrium humidity or temperature
- Easy operation by push button
- Adjustment by potentiometer
- Application range 0...100 %rh / -10...60 °C
- Battery or rechargeable battery operation
- Battery charge monitor (low battery indicator)
- Hold and auto power off functions

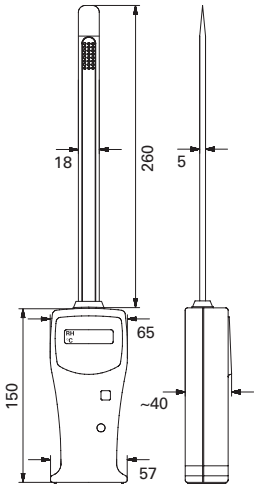

GTS

Order code GTS

- Integrated, robust aluminium sword probe
- 9 V battery
- Adjusted at 23 °C and 35, 80 %rh
- Accuracy: ±1.5 %rh / ±0.3 K

GTS set

Order code GTS-Set

Complete set, consisting of:

- Handheld device GTS
- Carry case AC1102
- Calibration device EGS
- SCS calibration standard EA50-SCS (5 ampoules 50 %rh with SCS certificate)
- Adjustment tool



Sword Hygrometer with fold-away probe

The S1 sword hygrometer is very popular among printers and paper technicians because its probe can be folded away for safe storage and the display angled towards the user. Perfect for the paper technicians, service engineers and paper consultants.



Applications

For paper technicians, printers and print instructors, for measurements in stacks of paper

Highlights and common features

- Sword probe for equilibrium relative humidity (ERH) and temperature
- Adjustable probe position
- Large, clear display of both parameters
- Easy operation
- Adjustment by potentiometer
- Application range 0...100 %rh / -10...60 °C
- Battery charge monitor (low battery indicator)
- Hold function
- Auto power off

S1

Order code S1

- Integrated, hinged aluminium sword probe
- 9 V battery
- Adjusted at 23 °C and 35, 80 %rh
- Accuracy: ±1.5 %rh / ±0.3 K

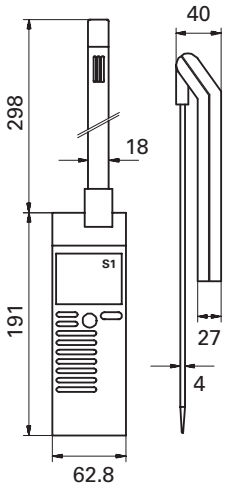

Specifications	GTS	S1
Humidity sensor	Hygromer® IN-1	
Temperature sensor	Pt100 Class B	
Display	3-digit LCD	%rh: 3-digit LCD, °C: 3 ½-digit LCD
Resolution	0.1 %rh / 0.1 °C	
Units	%rh, °C	%rh, °C, °F
Probe adjustment	35 / 80 %rh	35 / 80 / 10 % / T min / T max
Electronics operating range	0...100 %rh -10...60 °C	0...100 %rh -10...50 °C
Measurement ranges %rh / T	5...99.9 %rh / 0...50 °C	5...99.9 %rh / -25...75 °C
Response time	‹10 s	
Accuracy at 23 °C	±1.5 %rh / ±0.3 K (±2.5 ‹15 % ›90 %)	
Reproducibility	‹0.5 %rh / ‹0.1 K	
Dimensions (mm)	420 x 70 x 40 (device)	191 x 63 x 26 (device)
	260 x 18 x 5 (probe)	280 x 18 x 4 (probe)
Housing material	ABS	
Probe material	Aluminium	
Protection	IP 50	
Weight	Approx. 400 g	Approx. 350 g

DATA LOGGERS

HygroLog series

The long term recording of humidity and temperature conidtions is very important in storage, shipping, production processes, test facilities and many other areas. Once logged, the temperature and humidity data can be evaluated statistically. This provides valuable information on conditions that can have an influence on people, materials and objects.

The ROTRONIC data loggers fulfil the requirements of FDA 21 CFR Part 11 and GAMP 4. They have a degree of functionality currently not achieved by any other logger while being highly accurate and easy to use. Data can be shown in graph or table form. A large range of interchangeable probes means simple maintenance and flexibility in different applications, and loggers are available in a range configurations to suit most uses.

Applications

Warehouses, museums, libraries, art galleries, clean rooms, server rooms, factories, shipping, residential properties

Highlights

- Flash card data memory
- Saves up to 47,000 data records per MB card storage capacity
- Data retrievable by card reader, PDA, PC with HW4 or docking station
- Real-time clock
- Logging interval selectable between 5 s and 24 h
- Battery or rechargeable battery operation
- Battery life more than 1 year (depending on rechargeable battery and options)
- Logging mode selectable: start/stop, text/protected mode
- Logger electronics operating range: 0...100 %rh; -30...70 °C; with display -10...60 °C
- LED status indicator and audible alarm (beep tone)
- Optional display and keypad for display of measured values, status display, operation, adjustment and to view the log data
- Networkable with optional docking station
- Can be used with all HygroClip HC2-xx probes (see the chapter on probes, pages 6-12)



HygroLog NT2

Order code HL-NT2

- Logger for interchangeable HC2-xx probes (order probes separately)
- 9 V battery
- Logger operating range: 0…100 %rh; -30 …70 °C; with display -10…60 °C
- Measurement range 0…100%rh, -100…200 °C (probe dependent)
- 32 MB flash card
- Conforms to FDA 21 CFR Part 11 and GAMP4



HygroLog NT2-D

Order code HL-NT2-D

- Same specifications as HL-NT2, but with integrated keypad & LC display

HygroLog NT2-P

Order code HL-NT2-P

- As HL-NT2, but including a pre-fitted HC2-S probe

HygroLog NT2-DP

Order code HL-NT2-DP

- As HL-NT2-D, but including a pre-fitted HC2-S probe

For accessories and options for all Hygrolog HL-NT loggers: see pages 51/52

HygroLog NT3



The HygroLog NT3 models are especially suitable for changing measurement tasks. It is possible to directly connect two external probes, thereby opening up numerous possibilities where compact loggers with internal probes do not suffice. They are simple to use and easy to maintain; if probes have to be calibrated or replaced, this can be done in a few seconds without having to open the logger.

Applications

Warehouses, museums, libraries, art galleries, clean rooms, server rooms, factories, shipping, residential properties

Highlights

- Interchanagebale probes, one integrated and up to two external
- Saves up to 47,000 data records per MB card storage capacity
- Data retrievable by card reader, PDA, PC with HW4 and docking station
- Real-time clock
- Logging interval selectable between 5 s and 24 h
- Battery life more than 1 year
  (depending on rechargeable battery and options)
- Logging mode selectable: start/stop, text/protected mode
- Logger operating range: 0...100 %rh; -30 ...70 °C; with display –-10...60 °C
- LED status indicator and audible alarm (beep tone)
- Optional display and keypad for display of measured values, status display, operation, adjustment and to view the log data
- Networkable with optional docking station
- Can be used with all HygroClip HC2-xx probes (see the chapter on probes)



HygroLog NT3 — Order code HL-NT3

- Logger for interchangeable HC2-xx probes
- 9 V battery
- Logger operating 0...100 %rh / -10...60 °C
- Measurement range 0...100%rh, -100...200 °C (probe dependent)
- 32 MB flash card
- Conforms to FDA 21 CFR Part 11 and GAMP4
- Remote connection for second logger with display

HygroLog NT3-D — Order code HL-NT3-D

- As HL-NT3, with integrated keypad and LC display

HygroLog NT3-P — Order code HL-NT3-P

- As HL-NT3, with pre-fitted HC2-S probe

HygroLog NT3-DP — Order code HL-NT3-DP

- As HL-NT3-D, with pre-fitted HC2-S probe

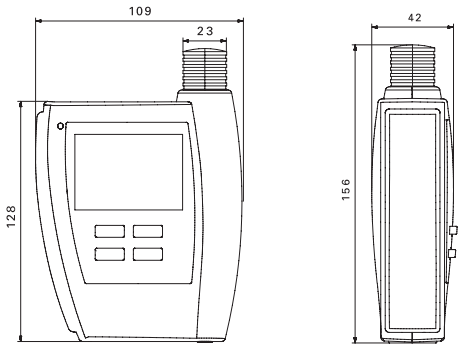

For accessories and options for all Hygrolog HL-NTxx loggers: see pages 51/52

Docking stations for HygroLog NT data loggers

The docking stations for the HygroLog NT series provide various functions depending on the model. They can serve as a mounting bracket, power supply connection, interface module for Ethernet, RS485, USB, RS232 and Wireless LAN or as an upgrade to allow additional digital or analogue probes to be connected to a logger. Probe inputs can be either digital or analog (voltage or mA). The types detailed here are not compatible with devices from earlier generations.

Overview docking stations

Order code	Inputs						Interfaces					
	External power supply	Digital / Analog probe inputs *	Analog input 0...2.5 V	Analog input 0(4)...20 mA	Switch inputs	Pt100 inputs	RS232 & RS485	USB & RS485	TCP/IP RJ45 & RS485	WLAN & RS485	Relay outputs	Query via Internet Explorer *
HL-DS-NT0												
HL-DS-NT1	✔											
HL-DS-NT2	✔						✔					
HL-DS-NT3	✔							✔				
HL-DS-NT4	✔				2				✔			
HL-DS-NT4-WL	✔				2					✔		
HL-DS-NT4-WEB*	✔				2							
HL-DS-PT2	✔				2	4		✔				
HL-DS-PT4	✔				2	2			✔			
HL-DS-PT4-WL	✔				2	2				✔		
HL-DS-R-1	✔				2			✔			2	
HL-U1	✔	4	✔		2		✔					
HL-U2	✔	4	✔		2			✔				
HL-U2-420	✔	4		✔	2			✔				
HL-U4	✔	4	✔		2				✔			
HL-U4-420	✔	4		✔	2				✔			
HL-U4-420-WEB*	✔	4		✔	2				✔			✔
HL-U4-WEB*	✔	4	✔		2				✔			✔
HL-U4-WEB-WL*	✔	2	✔		2					✔		✔
HL-U4-WL	✔	2	✔		2					✔		

* WEB: Access to data logger without HW4 software possible



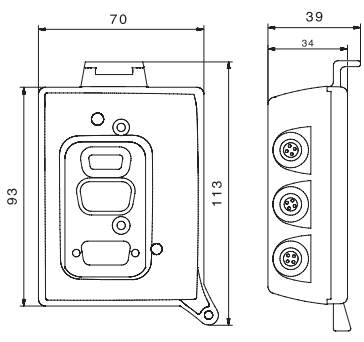

Specifications accessories & options	
Order code	Specifications & scope of delivery
Connection sets	
Hygrodata-NT-E	PC connection set, consisting of HW4-E standard software, docking station HL-DS-NT2 and RS232 data cable
Hygrodata-NT-P	PC connection set, consisting of HW4-P professional software, docking station HL-DS-NT2 and RS232 data cable
Hygrodata-NT-E-USB	PC connection set, consisting of HW4-E standard software, docking station HL-DS-NT3 and USB data cable
Hygrodata-NT-P-USB	PC connection set, consisting of HW4-P professional software, docking station HL-DS-NT3 and USB data cable
Software	
HW4-E	Standard software for programming and data management
HW4-P	Professional software with additional validation functions
HW4-OPC	HW4-P with OPC server functionality
HW4-VAL	HW4-OPC with comprehensive validation documentation
Probe cables	
E2-F3A	Probe extension cable 30 cm for loggers with connected Ethernet docking station Use for probe 1 (internal probe) to prevent self-heating by the Ethernet module
E2-01A	Probe extension cable for HygroClip HC2 probes, 1 m, black
E3-01A	Probe extension cable for HygroClip HC2 probes, 1 m, white
E2-02A	Probe extension cable for HygroClip HC2 probes, 2 m, black
E3-02A	Probe extension cable for HygroClip HC2 probes, 2 m, white
E2-05A	Probe extension cable for HygroClip HC2 probes, 5 m, black
E3-05A	Probe extension cable for HygroClip HC2 probes, 5 m, white
E2-02A-S	Probe extension cable for HygroClip HC2 probes, 2 m, black, with short connector
E3-02A-S	Probe extension cable for HygroClip HC2 probes, 2 m, white, with short connector
Communication cables	
AC0001	Standard Ethernet patch cable, 3 m
AC0002	Standard USB A/B cable, 1.8 m
AC0004	Standard RS232 cable D-sub 9-pin, 1-8 m
AC0005	Patch cable cat. 5e UTP, 3m, crossover
AC1614-02	RS485 cable to HygroLog NT docking station, for cabling via terminal box
Signal amplifier	
AC3003	Signal amplifier set for probe-to-logger cable lengths up to 100 m, consisting of 2 connection cables with electronic amplifier, open cable ends for connection via terminal box
Power supply units	
AC1211	AC mains adapter for HygroLog NT / docking stations / 240 VAC ›12 VDC
AC1213	Power supply unit 85-264 VAC/15 VDC, 100 W, DIN rail mounting
Memory cards & card reader	
AC-NT32MB	32 MB flash card, industrial type –40...85 °C
AC-NT64MB	64 MB flash card, industrial type –40...85 °C
AC0100	Multicard reader for flash cards
Other accessories	
NT-DESK	Desktop stand for HygroLog NT in combination with a docking station
ET-409	4-pin Binder connector, to connect Pt100 probes to a docking station

METEOROLOGY

Introduction

In meteorology, the precision of measurement data parameters is critical for accurate weather forecasting and environmental research. ROTRONIC meteorological probes have an excellent reputation for providing precise results even in the most demanding of environments, especially where high humidity and low temperatures dominate. Our current product range offers high performance and a wide range of configurations to suit every application and budget.

Even the best probes measure inaccurately if the surrounding conditions are not representative of the actual climatic conditions. Without appropriate weather protection shields, the probe temperature will not be correct, and since relative humidity is temperature dependent, significant measurement errors will be the result. Poorly ventilated weather protection shields can result in a micro-climate around the probes causing consequential errors of measurement.

Therefore, in applications which require a high level of accuracy, ventilated protection shields are used. High accuracy measurements are even more important when energy optimization is concerned. The more accurate the measurement, the smaller the control errors and the greater the energy savings.

ROTRONIC's meteorology probes in combination with ventilated weather and radiation protection shields provide the best possible measurement results. At a significantly lower price level, they can offer practically the same performance as that acheived by a dew point mirror meteorological system, but without the need for regular maintenance.

Weather protection shields were developed in close co-operation with Meteo Suisse and are utilized world-wide. Tests conducted clearly demonstrated the unmatched accuracy obtained by the combination of ROTRONIC probes and ventilated weather protection!



MeteoSwiss

Applications

Weather stations, snow guns, agricultural meteorology, high-Alpine meteorology, building management systems, climate modelling, ice warning systems, fog detection and wind turbines.

Actively ventilated shields



Applications

Snow guns, weather stations, agricultural meteorology, building management systems

Highlights

- Simple-to-install protective shield with integrated fan
- Special white coating minimises solar heating (RAL 9010)
- Easy probe mounting
- 12 VDC or 24 VDC supply for fan
- Compatible with various probe types

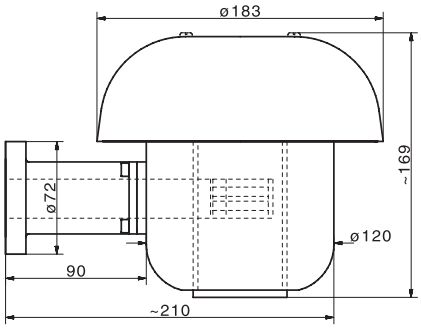

Order code	RS12T	RS24T
Range of application	-30...60 °C	
Material	Aluminium, POM, RAL 9010	
Supply	12 VDC, approx. 2 W	24 VDC
Fan	Papst ventilator IP 54	
Aspiration rate	3.5 m/s / 900 l/min	
Longevity	At 40 °C ~70,000 h, at 70 °C ~35,000 h	

Assembly sets for RS weather-protection shields

Order code	To be used with	Probe connector	Connection: clamp box
MKRS-HC2	HygroClip2 (HC2-S3)	E2	Clamps / 2 cable screw connections
MKRS-MP102-402	MP102H / MP402H	N/A	Clamps / 2 cable screw connections

Mounting connections

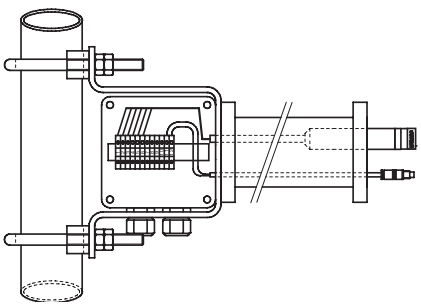

MKRS-HC2

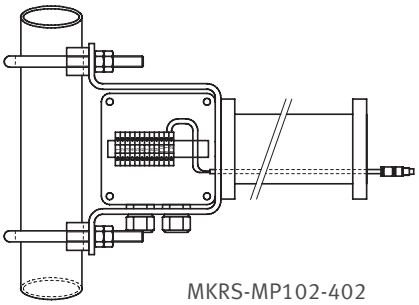

MKRS-MP102-402

Naturally Ventilated Shields

Naturally ventilated shields are used in applications where the conditions aren't so harsh and where demand for precision is not so high.

Applications

Snow guns, weather stations, building management systems

Highlights

- Easy-to-install protective screen
- Multi-plate system for natural ventilation
- Simple probe mounting
- Compatible with various probe types
- Mounting hardware included
- Suitable for 25...50 mm mast diameters
- Protection against wind speeds up to 68 km/h and horizontal precipitation

Order code	AC1002-AC1012	AC1003-AC1012
Number of plates	10	14
Supplied with	Mounting bracket and screws	
Protection	Probe protection tube	
Use	With probes from the MP100A series	With probes from the MP400A, MP102H, MP402H series

Order code	AC1015	AC1004
Type	HC2-S3 probe/cable protection tube	Weather and radiation protection
Number of plates		9
Supplied with		Mounting bracket and screws
Use	Along with AC1002-AC1012 / AC1003-AC1012	With HC2-S3 and connection cable



AC1002
AC1012



AC1004



AC1015

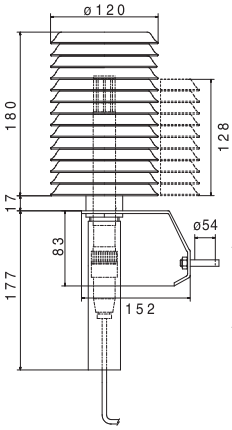

AC1002/AC1012
(10 plates)

AC1003/AC1012
(14 plates)

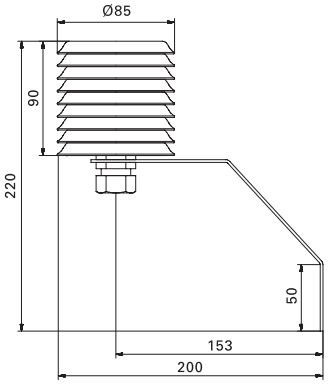

AC1004

HygroMet meteorological probes MP102H/402H

for interchangeable probes* HC2-S3



MP102H and MP402H series probes provide truly class leading accuracy and stability . Based on the HygroClip HC2-S3 probe, they provide linear voltage or current outputs for secure transmission over extended cable lengths. An RS485 interface is available on request.

With direct 4 -wire Pt100 temperature measurement available in the same probe assembly as the new AirChip3000 technology, this ultimate meteo probe combination offers outstanding performance within a single shield installation.

Applications

Weather stations, snow guns, building management systems

Highlights

- Range of application (temperature): -40...85 °C
- Current or voltage output signal
- Optional: directly connected Pt100 sensor
- UART & service interface to PCB

Tuchel 7-pin connector plug

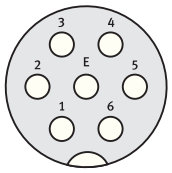

Pin configuration / Wire colors

Term	Colour	Pin
+VDC	Green	1
Ground	Grey	2
Humidity	White	3
Temperature	Brown	4
RS485 +	Red	5
RS485 –	Blue	6
Protection		E

Separate Pt100 (for both types):

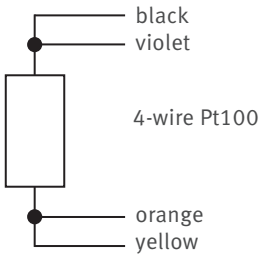

Order code						
MP102H-						Meteorology transmitter with voltage output
MP402H-						Meteorology transmitter with current output
	0					Without additional Pt100
	3					Separate Pt100 1/3 Class B, passive, 4-wire
	5					Separate Pt100 1/5 Class B, passive, 4-wire
	A					Separate Pt100 1/10 Class B, passive, 4-wire
Output signals MP102H						
		2				0...1 V = 0...100 %rh / -30...70 °C
		3				0...1 V = 0...100 %rh / -40...60 °C
Output signals MP402H						
		4				0...20 mA = 0...100 %rh / 0...100 °C
		5				0...20 mA = 0...100 %rh / -40...60 °C
		6				0...20 mA = 0...100 %rh / -30...70 °C
		7				4...20 mA = 0...100 %rh / 0...100 °C
		8				4...20 mA = 0...100 %rh / -40...60 °C
		9				4...20 mA = 0...100 %rh / -30...70 °C
(03-99)			**03**			PUR connection cable (03 m standard, max. 99 m)
				T7		7-pin Tuchel connector (not for passive 4-wire Pt100)
				00		Open ends

*Order HygroClip probe HC2-S3 separately
(Meteo probe with direct dew point output available on request)

HygroClip HC2-S3 (AirChip3000)

Applications

Meteorology stations, building automation systems, agricultural meteorology

Use

Meteorology probe MP102H & MP402H series, OEM applications

Highlights

- Measures relative humidity, temperature and dew/frost point
- Hygromer® V-1 sensor
- Saves up to 2,000 measurement pairs *
- Range of application 0...100 %rh / -50...100 °C
- UART interface and freely scalable analog signals 0...1 V
- Standard scaling 0...1 V = 0...100 %rh / -40...60 °C
- Probe with adjustment profile «Standard», factory certificate

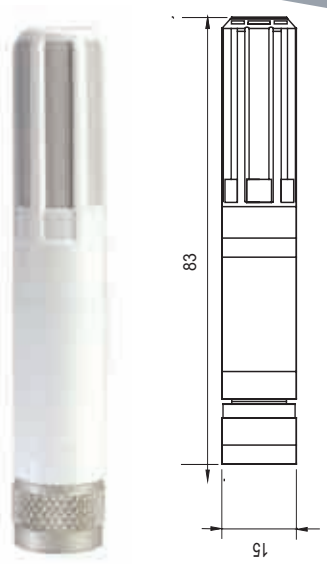

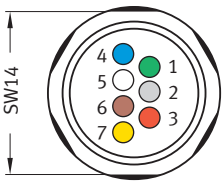

Electrical connections:
(all HygroClip2 probes with connector)

1 V+ (3.2 VDC to max. 5 VDC, ±0%; recommended: 3.3 VDC)
2 GND (ground, digital and power)
3 RXD (UART)
4 TXD (UART)
5 Analog signal %rh (0...100 %rh=0...1 V)
6 Analog signal °C (-40...60 °C = 0...1 V)
7 AGND (analog ground)

Order code	HC2-S3	HC2-S3H
Adjustment	At 23 °C and 10, 35, 80 %rh	
Accuracy	±0.8 %rh / ±0.1 K	±0.5 %rh / ±0.1 K
Probe	Ø15 x 85 mm	
Color	White	
Housing	Polycarbonate	
Filter	Polyethylene, white ~ 40 µm pore size	

Order code	HC2-R3
Probe	Interchangable probe with new humidity sensor

* Requires HW4 software

Analog meteorology probes

Standard meteorology probes with fixed sensors; analog technology
Hygromer® V-1 sensor



Order code	MP100A-xx	MP400A-xx
Output	Linear voltage output	Linear current output
Precision	Long term stability < 1 %rh / year	
Resistance	Condensation, thawing and dust particles	
Range of application	-40...60 °C	
Measurement	Temperature with Pt100 – direct or linear output signal	
Cable length	Cable-length compensation – no measurement deviations at a distance of up to 100 m	
Filter	Wire filter ~ 20 µm pore size	

Pin configuration of the Tuchel connector plug for MP100 & MP400 series

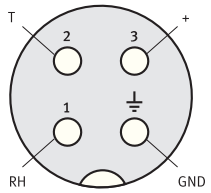

Tuchel T4

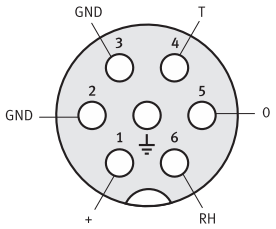

Tuchel T7 MP100

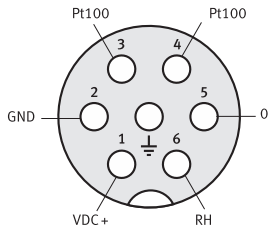

Tuchel T7 with separate Pt100

Order code						
MP100A-					Output signals: voltage	
MP101A-					0...1 VDC = 0...100 %rh	-0.4...0.6 V = -40...60 °C
MP102A-					0...1 VDC = 0...100 %rh	0...1 V = -30...70 °C
MP103A-					0...1 VDC = 0...100 %rh	0...1 V = -40...60 °C
MP106A-					0...1 VDC = 0...100 %rh	Separate Pt100 in 4-wire circuit
MP400A-					Output signals: current	
MP400A-					0...20 mA = 0...100 %rh	Pt100, 4-wire passive
MP401A-					4...20 mA = 0...100 %rh	Pt100, 4-wire passive
MP402A-					4...20 mA = 0...100 %rh	2-wire, only %rh
MP403A-					4...20 mA = 0...100 %rh	2-wire / Pt100 4-wire passive
MP404A-					0...20 mA = 0...100 %rh	0...20 mA = 0...100 °C
MP405A-					0...20 mA = 0...100 %rh	0...20 mA = -40...60 °C
MP406A-					0...20 mA = 0...100 %rh	0...20 mA = -30...70 °C
MP407A-					4...20 mA = 0...100 %rh	4...20 mA = 0...100 °C
MP408A-					4...20 mA = 0...100 %rh	4...20 mA = -40...60 °C
MP409A-					4...20 mA = 0...100 %rh	4...20 mA = -30...70 °C
					Common parameters	
	T4				Signals & supply to Tuchel 4-pin connector plug on the probe	
	T7				Signals & supply to Tuchel 7-pin connector plug on the probe	
	CG				PUR cable, grey	
		02			Cable length (02 -99) in m	
			C4		Cannon 4-pin connector plug at the end of the cable	
			00		Open ends, tin-plated	
				- W4W	Sensor protection: wire filter	

Order codes, standard probes:			
Humidity range: 0...100 %rh = 0...1 V (MP100A) or 4...20 mA (MP400A)			
Order code	Range (°C)	Connector	Cable compensation
MP101A-T4-W4W	-0.4...0.6 V = -40...60 °C	Tuchel 4-pin connector plug	No
MP101A-T7-W4W	-0.4...0.6 V = -40...60 °C	Tuchel 7-pin connector plug	Yes
MP408A-T4-W4W	4...20 mA = -40...60 °C	Tuchel 4-pin connector plug	No
MP408A-CGXX-W4W XX = length in m	4...20 mA = -40...60 °C	Open ends	No

Dimensional drawings

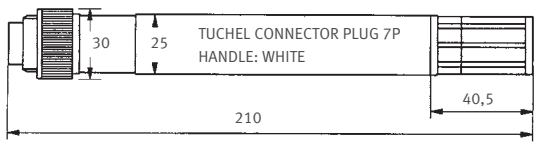

MP100A-T7

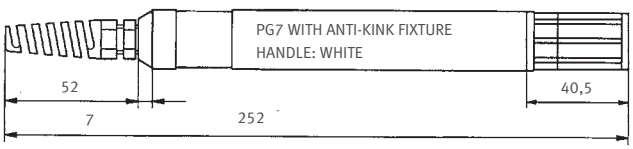

MP100A-CG

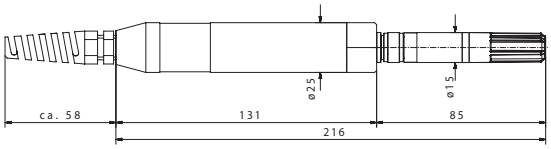

MP102H / MP402H /-0

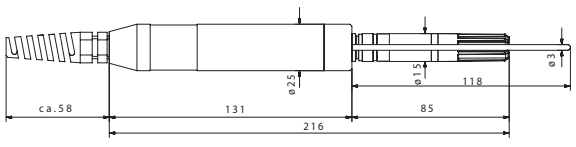

MP102H /MP402H /-3/-5/-A

HygroClip probes for agricultural and other outdoor applications

New cable probes for agricultural and outside applications are equipped with a fast sensor and new filter technology which offers significantly improved protection against the growth of biofilm. Typical applications: weather stations and data recording systems.

Applications

Agriculture, OEM and meteorology

Use

Handheld devices, data loggers, transmitters, OEM products

Highlights

- Measures relative humidity, temperature and dew/frost point
- Hygromer® V-1 sensor
- Saves up to 2,000 readings measurement pairs *
- Range of application 0...100 %rh / -50...100 °C
- UART interface and freely scalable analog signals 0...1 V
- Standard scaling 0...1 V = 0...100 %rh / -40...60 °C
- Probe with adjustment profile «Standard», factory certificate



AIR CHIP TECHNOLOGY

Order code	HC2-S3C03	HC2-S3C03-PT15
Adjustment	At 23 °C and 10, 35, 80 %rh	
Accuracy	±1 %rh / ±0.2 K	±1 %rh / ±0.1 K (passive Pt100)
Filter	Polyethylene, white ~ 40 µm pore size	
Color	White	
Probe	3 m TPU open-ended cable probe	PT100 1/5 Class B
Voltage	5...24 VDC / 5...16 VAC	
Dimensions	Ø15 x 140 mm	On request

* Optional, requires HW4 software

Dimensional drawings

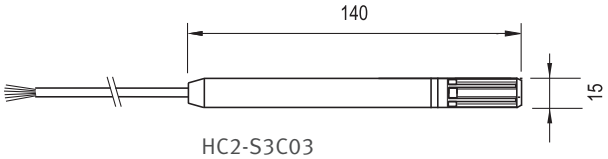

HC2-S3C03

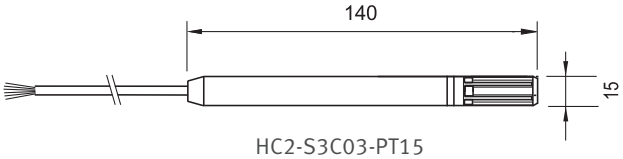

HC2-S3C03-PT15

Adapter with voltage regulator for meteorological applications (permissible voltages 5...24 VDC / 5...16 VAC)	
Order code	Adapter
E3-01XX-ACT	Adapter with voltage regulator for HC2-S3 probe, 1 m cable, open-ended
E3-02XX-ACT	Adapter with voltage regulator for HC2-S3 probe, 2 m cable, open-ended
E3-05XX-ACT	Adapter with voltage regulator for HC2-S3 probe, 5 m cable, open-ended

Specifications MP-100/400 series				
Series	MP102H	MP402H	MP100A (analog)	MP400A (analog)
Output signal type	Voltage	Current	Voltage	Current
Supply voltage	5...24 VDC	15...24 VDC V min = 10 V + (0.02 x load*)	4.8...30 VDC	MP402/403: 8 V+ (0.02 x load) Others: 5 V+ (0.02 x load) max. 26 VDC
Current consumption	‹6 mA	‹50 mA	6 mA	20 mA / 2x20 mA
* Load (in Ω)	›1 k Ω	‹500 Ω	›1 k Ω	‹500 Ω
Cable-length compensation	Yes	N/A	Up to 99 m	N/A
Range of application electronics	-40...85 °C	-40...85 °C	-40...60 °C 0...100 %rh	-40...60 °C 0...100 %rh
Humidity measurement range	0...100 %rh	0...100 %rh	0...100 %rh	0...100 %rh
Temperature measurement range	Freely scalable	Freely scalable	According to order number	According to order number
Humidity sensor	N/A, HC2-S3 probe	N/A, HC2-S3 probe	Hygromer® V-1	Hygromer® V-1
Temperature sensor	N/A, HC2-S3 probe	N/A, HC2-S3 probe	Pt100 1/3 Class B	Pt100 1/3 Class B
Separate Pt100 DIN (optional)	According to order number	According to order number	N/A	N/A
Accuracy (humidity)	Same as HC2-S3 probe	Same as HC2-S3 probe	10...95 %rh: ±1.5 %rh, ‹10, ›95 %rh: ±2.5 %rh	
Accuracy (temperature)	Same as HC2-S3 probe	Same as HC2-S3 probe	±0.3 K	±0.3 K
Reproducibility	Same as HC2-S3 probe	Same as HC2-S3 probe	‹0,5 %rh/ ±0.1 K	‹0,5 %rh/ ±0.1 K
Long term stability (humidity sensor)	‹±1 %rh/year	‹±1 %rh/year	‹±1 %rh/year	‹±1 %rh/year
Response time	‹12 s	‹12 s	‹12 s	‹12 s
Adjustment points				
Humidity (analog)	N/A	N/A	35, 80, H(min.)	35, 80, H(min.)
Temperature (analog)	N/A	N/A	Tmin, Tmax	Tmin, Tmax
Humidity & temperature (digital)	Adjustment of the probe	Adjustment of the probe	N/A	N/A
Housing material	POM	POM	POM	POM
Protection	IP 65	IP 65	IP 65	IP 65
Weight	Approx. 200 g	Approx. 200 g	Approx. 200 g	Approx. 200 g

WATER ACTIVITY

Water activity measurement

The measurement of water activity or equilibrium relative humidity is a key parameter in the quality control of any moisture sensitive product or material. Water activity is by definition the free or non chemically bound water in foods and other products. The bound water cannot be measured with this method.

Why is water activity measured?

The free water in a product influences its microbiological, chemical and enzymatic stability. This is especially important in the case of perishable products such as foods, grain, seeds, etc. as well as in the case of medicines and other products of the pharmaceutical and cosmetic industries. If there is too much free water available, the foods spoil, and if there is too little water available, other product properties can be affected.

The table below shows typical growth thresholds below which the specified contaminant cannot replicate and therefore spoil the product. Control of water activity therefore has a significant impact on the shelf life of a product.

The measurement of water activity also supplies useful information on properties such as the cohesion, storability, agglomeration or pourability of powders, tablets, etc. or adherence of coatings.

Based on HygroClip digital technology for high performance and easy digital calibration, ROTRONIC water activity probes are suitable for almost any application. All water activity stations and probes incorporate temperature measurement as standard.

Water activity	Contaminant
aw = 0.91…0.95	Most bacteria
aw = 0.88	Most yeasts
aw = 0.80	Most mildews
aw = 0.75	Halophile bacteria
aw = 0.70	Osmiophile yeasts
aw = 0.65	Xerophile mildew

Water activity measurement stations measure in the range of 0…1 aw which equates to 0…100 %ERH and supply a digital output signal to interface with HygroLab and HygroPalm water activity indicators. Digital calibration can be performed with the help of these instruments, or with PC software. The HC2-AW and AW-DIO measurement stations have a large thermal mass. This means the probes react very slowly to temperature changes so that virtually no variations arise during measurement – especially when using the AW Quick function. The extremely small internal volume of the sensor chamber ensures humidity equilibrium is reached very quickly in the case of all products. The section «Accessories» describes the sample holders, sample containers and sealing mechanism in detail.

HygroLab series



Applications

Water activity measurements in the laboratory: cheese, meat, tobacco, building materials, pet foods, bakery products, paper, medicines, horticulture, agriculture, etc.

Use

With AW-DIO probes and insertion probes for bulk materials

Highlights

- Suitable for many applications
- AW Quick mode for results in typically 4-5 minutes
- High measurement precision
- Long term stability
- Interchangeable measurement stations
- Multichannel display
- Validated PC analysis software



HygroLab 2

Order code HygroLab 2

- 4-channel benchtop display unit for measurement of water activity, temperature and relative humidity
- Display option: aw or %rh
- All psychrometric calculations available
- Definable pressure constant for calculations
- AC power supply
- RS232/485 interface
- Dimensions: 225 x 170 x 70 mm



HygroLab 3

Order code HygroLab 3

- 4-channel benchtop display unit for measurement of water activity, temperature and relative humidity
- All psychrometric calculations available
- Definable pressure constant for calculations or with pressure probe
- Integrated AW Quick function
- AC power supply
- RS232/485 interface
- Dimensions: 225 x 170 x 70 mm

HygroLab 3-E

Order code HygroLab 3-E

- As HygroLab 3, but with Ethernet TCP/IP interface

HygroPalm HP23 series

In many situations it can be very useful to measure water activity in production or storage rooms, e.g. inspection of bulk materials to ensure they meet specifications.

The new HP23-AW was developed as a portable solution with most of the functionality of the HygroLab3.



Applications

Water activity measurements in production processes: random checks of cheese, meat, tobacco, building materials, pet food, bakery products, paper, medicines, horticulture, agriculture, etc.

Highlights

- Measures humidity and temperature (aw or %rh and °C/°F)
- Calculates absolute humidity
- Software-aided probe calibration / adjustment (one-point / multi-point)
- Range of application 0...1 aw (0...100 %rh) / -10...60 °C
- UART interface
- Battery power monitor
- Trend indicator

HygroPalm 23-AW

Order code HP23-AW

- 2 probe inputs for interchangeable HC2 probes, with 9 V battery
- All psychrometric calculations available
- Accelerated measurement of water activity (AW Quick mode): allows measurement of most products in typically 4-6 minutes
- Equilibrium humidity measurement (standard mode) with automatic detection of equilibrium state
- Adjusted at 23 °C and 10, 35, 80 %rh
- Accuracy: ±0.8 %rh (0.008 aw) / ±0.1 K (depending on probe used)
- Saves up to 2,000 data records for each of %rh, °C, date, time

Available beginning spring 2009
Not compatible with AW-DIO probe

AW Quick

Order code HW4-P-Quick

AW Quick is a highly developed software function for water activity analysis that is integrated in both the HygroLab 3 and in the HP23-AW handheld device. It supplies results in typically five minutes or less. It also allows conventional water activity measurement with automatic detection of humidity equilibrium.

HygroPalm AW sets



The HygroPalm AW sets are the perfect solution for on-site measurements. They are supplied in a tough, lightweight ABS carry case and include everything needed for measurement and calibration.

The difference between the two sets lies in the size of the sample holders and disposable sample containers.

Applications

Water activity measurements in production areas: checks of cheese, meat, tobacco, building materials, pet food, bakery products, paper, medicines, horticulture, agriculture, etc.

Highlights

- Measures humidity and temperature (aw or %rh and °C/°F)
- Calculates absolute humidity
- Software-aided probe calibration / adjustment (one-point / multi-point)
- Range of application 0…1 aw (0…100 %rh) / -10…60 °C
- UART interface
- Battery power monitor
- Trend indicators

AW1-Set-14

Order code HP23-AW-Set-14

- Contains the sample holder WP-14-S/PS-14
- For product samples such as tablets, powders, seeds, powdered spices, tea, etc.

AW1-Set-40

Order code HP23-AW-Set-40

- Contains the sample holders WP-40/PS-40
- Suitable for measurement of, for example, pet food, ore, nuts, beans, etc.

See «Accessories» for further information.
Available beginning spring 2009

Order information		
Order code HygroPalm AW sets	**HP23- AW-Set-14**	**HP23- AW-Set-40**
Consisting of:		
Handheld device	HP23 AW	
Measurement probe	HC2-AW	
Sample holder	WP-14-S	WP-40S
Disposable sample containers	PS-14, 14 mm	PS-40, 40 mm
35 %rh humidity standards	EA35-SCS	
80 %rh humidity standards	EA80-SCS	
50 %rh humidity standards	EA50-SCS	
10 %rh humidity standards	EA10-SCS	
Carry case	AC1124	

Measurement stations

Water activity probes with large thermal mass, cable length ~1m

Applications

For water activity measurements in bulk materials such as flour, grain, spices, etc.

For solid products such as meat, sausage as well as oils, fats, etc.

Uses

Handheld and bench top devices

Highlights

- Measures water activity
- Measurement range: 0…1 aw (0…100 %rh), 5…50 °C
- Digital interface



HC2-AW

Order code HC2-AW

- Water activity probe with large thermal mass
- Cable length ~1m
- UART interface
- Probe with adjustment profile «Standard», factory certificate
- Adjusted at 23 °C and 10, 35, 80 %rh
- Accuracy: ±0.01 aw / 0.8 %rh / ±0.1 K
- Wire mesh filter with approx. 20…25 µm pore size, material DIN1.4401



HC2-AW-HH

Order code HC2-AW-HH

- Like HC2-AW, but with special sensor for measurements in high humidity range

AW-DIO

Order code AW-DIO

- Water activity probe with large thermal mass
- Cable length ~1m
- DIO interface for original HygroPalm/HygroLab devices
- Probe with adjustment profile «Standard», factory certificate
- Adjusted at 23 °C and 10, 35, 80 %rh
- Accuracy: ±0.01 aw / 1 %rh / ±0.3 K
- Wire filter with approx. 20…25 µm pore size, material DIN1.4401

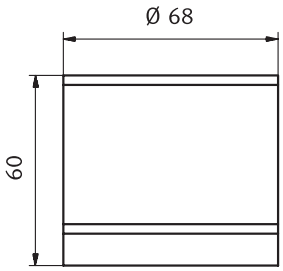



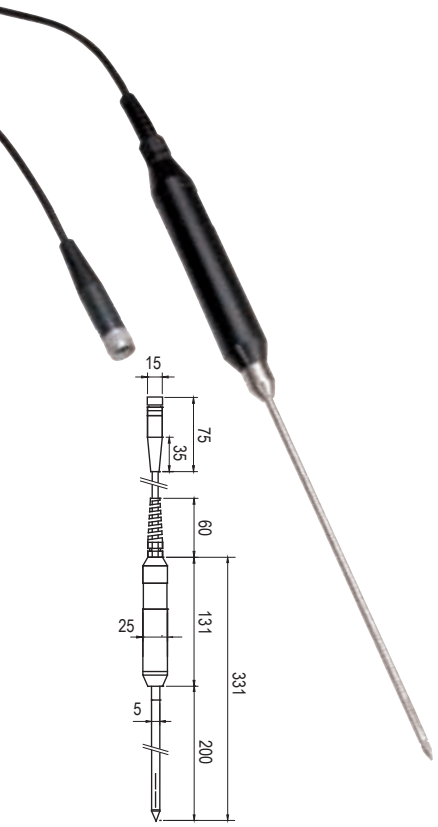

INSERTION PROBE 5 mm, for measurements in bulk materials

Applications

For direct measurement of water activity in dust-free bulk materials: tablets, grain, gel capsules and granulated materials. The HygroClip2 P05 is a stainless steel probe with a diameter of 5 mm and laser-cut slots to allow air to condition the sensors.

Highlights

- Measures water activity (humidity), temperature and dew point
- Saves up to 2,000 measurement pairs *
- Range of application: 0…1 aw (0…100 %rh) / -40…85 °C
- UART interface and freely scalable analog signals 0…1 V
- Standard scaling 0…1 V = 0…1 aw (0…100 %rh) / -40…60 °C
- Probe with adjustment profile «Standard», factory certificate

Order code	HC2-P05
Type	∅ 5 x 200 mm, insertion probe with air slots, ~2m TPU cable
Adjustment	At 23 °C and 10, 35, 80 %rh
Accuracy	± 0.015 aw (±1.5 %rh)/±0.3 K
Handle color	Anthracite
Weight	Approx. 160 g

* Requires HW4 software

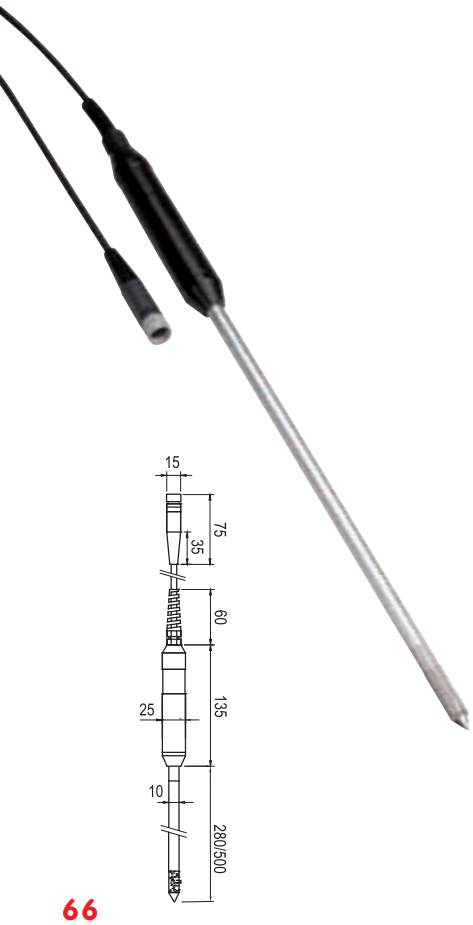

INSERTION PROBES 10 mm, for measurements in bulk materials

Applications

Measurements in dusty bulk materials such as flour, sugar, etc.

Highlights

- Measures water activity (humidity), temperature and dew point
- Saves up to 2,000 measurement pairs *
- Range of application: 0…1 aw (0…100 %rh) / -40…85 °C
- UART interface and freely scalable analog signals 0…1 V
- Standard scaling 0…1 V = 0…1 aw (0…100 %rh) / -40…60 °C
- Probe with adjustment profile «Standard», factory certificate

Order code	HC2-HP28	HC2-HP50
Type	Insertion probe with steel sinter filter, ~2m TPU cable	
Adjustment	At 23 °C and 10, 35, 80 %rh	
Accuracy	± 0.008 aw (±0.8 %rh)/±0.1 K	
Probe length	280 mm	500 mm
Handle color	Anthracite	
Steel sinter filter	ET-Z10	
Weight	Approx. 200 g	Approx. 250 g

* Optional, requires HW4 software

Sample holders WP-14-S/40/40TH

The stainless steel sample holders were developed specifically for the water activity probes HC2-AW/AW-DIO. There are two sizes available: WP14-S for small samples (14 mm deep) and WP40 for larger samples (40 mm deep). Both products provide excellent sample containment and optimum temperature stability. The WP-40TH can be used with both disposable sample holders. Material: WP14-S and WP-40: V2A steel, WP-40-TH: brass, nickel-plated.



Order code	WP-14-S	WP-40	WP-40TH
	For PS14	For PS14 and PS40	With water jacket for temperature control
Weight	Approx. 350 g	Approx. 1250 g	Approx. 1550 g

Disposable sample containers PS-14/PS-40

The disposable sample containers ensure the optimum sample volume is introduced into the WP-14-S, WP-40 or WP-40TH sample holders. They prevent the sample holders from coming into direct contact with the product being tested, thereby preventing soiling or cross contamination. The sample containers also provide a convenient means of collecting and storing samples.



Order code	PS-14	PS-40
Bag	100 sample containers for WP-14-S	100 sample containers for WP-40 / WP-40TH
Weight	Approx. 880 g	Approx. 1250 g
Volume	18.5 cm3	52.6 cm3

Clamp sealing mechanism

In the case of very dry or very moist samples additional mechanical sealing of the AW measurement station and sample holder may be necessary to prevent external conditions influencing the sample. The AW-KHS provides a strong mechanical seal and is compatible with the WP-40 and WP-40TH sample holders.



Order code	AW-HKS
Weight	Approx. 1100 g

Calibration devices see page 90

Specifications			
Feature	HygroLab 2	HygroLab 3	HP23-AW
Probe connections	4	4	1
PC interface	RS232/485	TCP/IP or RS232	USB
Networking	Up to 64 devices using RS485		No
Aw Quick mode	Option. Only via PC	Integrated and with PC and HW4 software	Yes, directly readable
Calibration with keypad 1-point %rh (aw)	Yes		
4-point %rh / 2-point °C/°F	Yes		
Calibration with PC	Yes	Yes	
1-point %rh (aw)	Yes	Yes	
4-point %rh (aw) / 2-point °C/°F	Yes	Yes	
Display units	%rh, aw, °C, °F,	%rh, aw, °C, °F,	
Calculated parameters	Dew point, wet-bulb temperature, enthalpy, ratio of mixture, water vapor content, partial water vapor pressure, saturation water vapor pressure		
Audible signal at end of measurement	No	Yes	No
Electronics operating range	0...99 %rh, -10...60 °C (14...140 °F)		
LC display	3 lines alphanumeric		
Trend indicator	Yes		
Display resolution	0.1 %rh / 0.1 °C/°F, 0.001 aw	0.1 %rh / 0.1 °C/°F, 0.001 aw, 0.01 calculated value °C/°F	0.001 aw 0.01 °C/°F
Housing	Aluminium, 220 x 170 x 55 mm		ABS
Power supply	9 V power supply, via AC power adapter		9 V battery or 9 V power supply unit via mini USB
Current consumption	Max. 20 mA		‹10 mA
CE conformity	EN 61000-6-2:2001, EN 61000-6-4:2001		
Weight	1100 g	1100 g	300 g

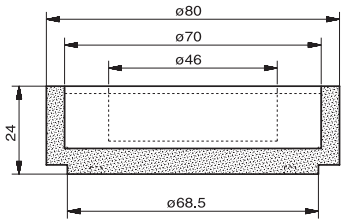

WP-14-S

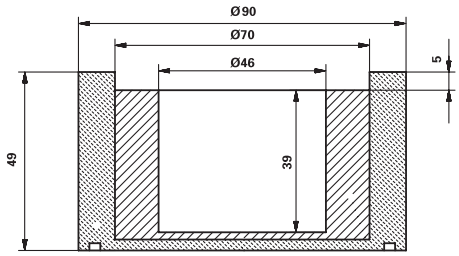

WP-40

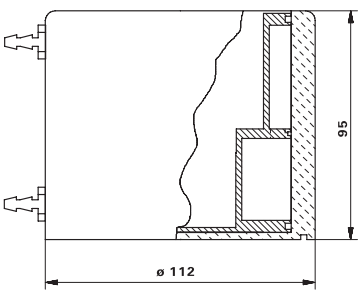

WP-40TH

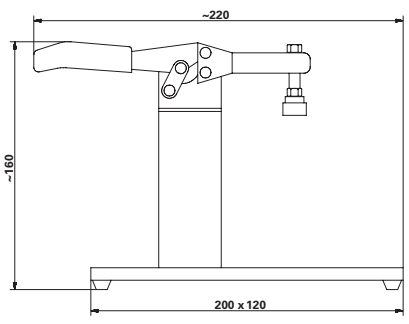

AW-KHS

TEMPERATURE MEASUREMENT

Temperature measuring devices

Temperature measurement is very important in many production, storage, shipping and drying processes. The law in many countries requires that, in addition to other parameters, the process and storage temperatures are carefully controlled and recorded in (for example) the food and pharmaceutical industries.

The new ThermoFlex5 transmitters from ROTRONIC meets these needs. Easy to use, simple to install and with a large measurement range, the devices can be used for almost every application. Depending on the model, the transmitters provide analogue or digital output signals. The digital models can be integrated in networks via TCP/IP, USB and RS485 interfaces.
The devices are based on the new AirChip3000 technology.



TF5x series for interchangeable Pt100 probes

Applications

HVAC applications, building management systems, museums, libraries, warehouses, cold stores, etc.

Highlights and common features

- Probe interchangeable in just a few seconds
- Temperature measurement with Pt100 probes in 4-wire circuit
- Range of application -40…60 °C; -10…60 °C with LCD, 0…100 %rh
- Measurement range -100…600 °C, freely scalable
- Use as a simulator for system validation *
- UART service interface
- 4-pin Binder connector
- Can be mounted on a DIN rail (see accessories, page 102)
- Suitable probes: Pt100 probes AC1900…AC1916-AT (page 74)

* Requires HW4 software



TF52-W SERIES

- 2-wire 4...20 mA type
- Signal freely scalable *
- Version with display and keypad (optional)
- Alarm indicators

TF53-W SERIES

- 3/4-wire types with selectable output signal (mA, V)
- Signals freely selectable and scalable by user *
- Version with display and keypad (optional)
- Backlit display
- Alarm indicator
- Optional USB & RS485 interface

* Requires HW4 software

Dimensions as HF5 series

Order information (for accessories see pages 100-102)							
Power supply and output signal type							
TF520-							2-wire, <28 VDC, common V+, 4...20 mA (Only display without backlight possible)
TF531-							3/4-wire, 15...40 VDC / 12...28 VAC, 0...20 mA
TF532-							3/4-wire, 15...40 VDC / 12...28 VAC, 4...20 mA
TF533-							3/4-wire, 5...40 VDC / 5...28 VAC, 0...1 V
TF534-							3/4-wire, 15...40 VDC / 3...28 VAC, 0...5 V
TF535-							3/4-wire, 15...40 VDC / 12...28 VAC, 0...10 V
Instrument type							
	W	**T**					Wall model
Scaling of the output signals							
			1	**X**			0...50 °C / 0...122 °F
			2	**X**			10...40 °C / 50...104 °F
			3	**X**			-40...60 °C / -40...140 °F
			4	**X**			-30...70 °C / -22...158 °F
			5	**X**			-40...85 °C / -40...185 °F
			6	**X**			0...100 °F (-17.7...37.7 °C)
			7	**X**			0...200 °F (-17.7...93.3 °C)
			8	**X**			0...300 °F (-17.7...148.8 °C)
			9	**X**			-50...200 °F (-45.5...93.3 °C)
			A	**3**			0...100 °C
			C	**4**			-50...150 °C
Optional display							
					D		With keypad & LC display
					X		Without display
Electrical connections (analogue signals to terminals)							
						1	1 M16 x 1.5 cable gland
						5	1 x ½" conduit adapter

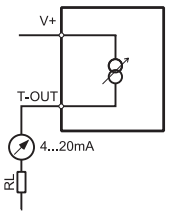

Schematic 2-wire types

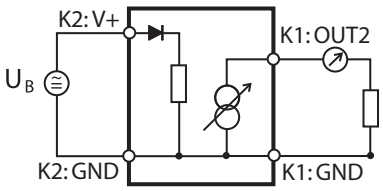

Schematic 3-wire current signal

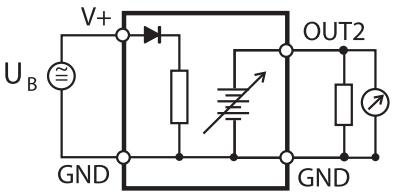

Schematic 3-wire voltage signal

The devices can be operated with the Pt100 probes on page 74.
Fundamentally, however, all Pt100 probes may be used. The drawing to the right shows the pin configuration:

Pt100 input (contact side of the flange socket / corresponds to the solder side of the connector)

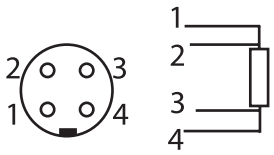

4-wire Pt100

Detailed specifications		
Power supply / Connections	TF52	TF53
Supply voltage	10...28 VDC V min = 10 V + (0.02 x load*)	15...40 VDC / 12...28 VAC
Current consumption	20 mA, 4...20 mA current loop	
Electrical connections	Screw terminals and M16 cable gland or ½" conduit adapter	
Temperature measurement	TF52	TF53
Sensor	Pt100 1/3 Class B (order separately)	
Measurement range	-100...600 °C / -58...212 °F	
Accuracy at 23 °C	±0.2 K	
Repeatability	0.05 °C	
Long term stability	‹0.1 °C/year	
Response time	Typically 4 s for 63 % of a change from 23 to 80 °C (1 m/sec air flow at sensor)	
Start-up time and refresh rate	TF52	TF53
Start-up time	Typically 3.4 s	Typically 1.9 s
Signal type	4...20 mA	0...20 mA, 4...20 mA 0...1 V, 0...5 V, 0...10 V
Scale limits	-999.99...+9999.99 units, user programmable	
*Maximum load	0/500 Ω	0/500 Ω (current signal), min. 1000 Ω (voltage signal)
Service interface	UART (universal asynchronous receiver transmitter) on mini USB interface	
Service cable maximum length	5 m (16.4 ft)	
General specifications		
Optional display	LCD, 1 or 2 decimals, without backlight	LCD, 1 or 2 decimals, with backlight and trend indicator
Housing material / Protection	ABS / IP 65	
Weight	Approx. 250 g	
CE/EMC compatibility	EMC Directive 2004/108/EC EN 61000-6-1: 2001, EN 61000-6-2: 2005, EN 61000-6-3: 2005, EN 61000-6-4: 2001 + A11	
Solder	Lead-free (RoHS-compliant)	
Fire resistance	Conforms to UL94-HB	
FDA/GAMP compatibility	Conforms to FDA 21 CFR Part 11 and GAMP 4	
Electronics operating range	-40...60 °C / -10...60 °C (models with display) 0...100 %rh, non-condensing	



ThermoPalm TP22

For HVAC technicians, the pharmaceutical industry, building management systems, the paper industry, research and many others.

Highlights and common features

- Probe interchangeable in just a few seconds
- Temperature measurement with Pt100 probes in 4-wire circuit
- Electronics operating range -40…60 °C; -10…60 °C with LCD, 0…100 %rh
- Measurement range -100…600 °C, freely scalable
- UART service interface
- 4-pin Binder connector
- Suitable probes: Pt100 probes AC1900…AC1916-AT

ThermoPalm

Order code TP22

Applications

HVAC applications, pharmaceutical industry, building management systems, paper industry, research, etc.

- For interchangeable Pt100 probes in 4-wire circuit
- Electronics operating range -10…60 °C
- Saves up to 2,000 data records (temperature, date, time)
- 9 V battery
- Accuracy: ±0.1 K (depending on probe)

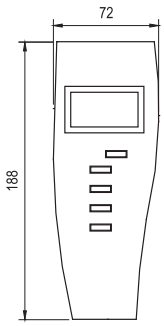

Specifications	TP22
Main features	
Probe type	Pt100 probes in 4-wire circuit
Measurement range	-100...600 °C
Accuracy at 23 ± 5 °C	±0.1 K
Reproducibility	0.01K
Initialization time	‹2 seconds
Range of application electronics	-10...60 °C
Display resolution	2 decimals
Display illumination	Yes
Alarm indicators	Yes
Battery power indicator	«Low Battery» indicator
Functions	
Trend indicator	Yes
Probe adjustment with software	1-point and multi-point with AC3006 service cable
Probe adjustment with keys	1-point
Data logging	2,000 readings
Event logging	Yes
User information	Via service cable & HW4 software
Device lock (password-protected)	Via service cable & HW4 software
Service information	Scheduled calibration
Audit trail / Electronic records	Conforms to FDA 21 CFR Part 11 and GAMP
Electrical specifications	
Power supply	9 V battery
Rechargeable battery charge	No
Current consumption	‹10 mA
Communication interfaces	Via service cable
Service interface	UART (universal asynchronous receiver transmitter) on mini USB interface
Maximum length service cable	5 m
Mechanical specifications	
Housing material	ABS
Dimensions	274 x 72 x 35 mm
Weight	Approx. 300 g
Standards	EN 61000-6-4 & EN 61000-6-2
FDA / GAMP compatibility, audit trail	Conforms to FDA 21 CFR Part 11 and GAMP 4
IP protection	IP 40

The devices can be connected to the Pt100 probes on page 74. Fundamentally, however, all Pt100 probes may be used. The drawing to the right shows the pin configuration:

Pt100 input
(contact side of the flange socket / corresponds to the solder side of the connector)

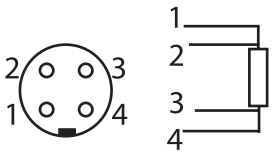

4-wire Pt100

Pt100 probes

All probes Pt100 Class A with 4-wire connection, except AC1913: Class B. Connection: 4-pin Binder connector plug series 712
τ90: Time to adjustment of 90% of a temperature jump, specified for air / water.

Specifications			
Order code			
AC1900	Rod probe 100 x 3 mm, DIN 1.4401 -70...500 °C, τ90: 8 / 6 s		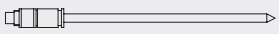
AC1901	Rod probe 250 x 3 mm, DIN 1.4401 -70...500 °C, τ90: 8 / 6 s		
AC1902	Insertion probe with handle, DIN 1.4401 -70...500 °C, τ90: 8 / 6 s	1 m PUR cable max. 80 °C	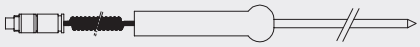
AC1903	Cable probe 200 x 6 mm, not waterproof DIN 1.4401, -70...500 °C, τ90: 170 / 15 s	2 m thermoplastic cable, max. 110 °C	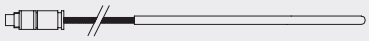
AC1904	Cable probe 50 x 6 mm, waterproof DIN 1.4401, -50...500 °C, τ90: 185 / 20 s	2 m thermoplastic cable, max. 110 °C	
AC1905	Surface probe 40 x 10 x 5 mm DIN 1.4301, -70...500 °C, τ90: approx. 90 s no standard	2 m silicon cable max 180 °C	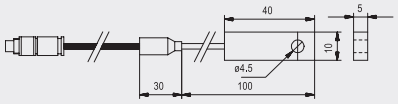
AC1907	Surface probe with handle, offset DIN 1.4401, -70...500 °C, τ90: approx. 90 s no standard. Do not calibrate in oil!	1 m PUR helix cable max. 80 °C	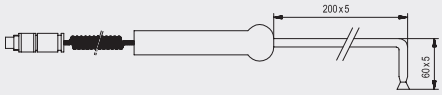
AC1908	Handheld probe for measurements in air 250 x 4 mm, -50...120 °C, τ90: 20 / --s	1 m PUR helix cable max. 80 °C	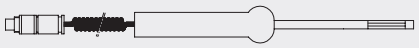
AC1909	Rod probe for measurements in air 100 x 4 mm, DIN 1.4401, -50...120 °C, τ90: 20 / -- s		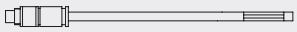
AC1910	30 mm screw-in probe ¼" G DIN 1.4401, -70...500 °C, τ90: 8 / 6 s	2 m silicon cable max. 180 °C	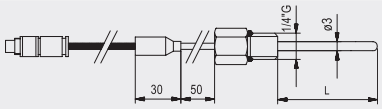
AC1911	50 mm screw-in probe ¼" G DIN 1.4401, -70...500 °C, τ90: 8 / 6 s	2 m silicon cable max. 180 °C	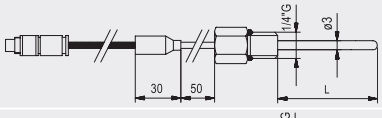
AC1912	100 mm screw-in probe ¼" G DIN 1.4401, -70...500 °C, τ90: 8 / 6 s	2 m silicon cable max. 180 °C	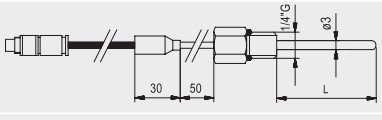
AC1913	Silicon foil probe, 26 x 32 x 2.5 mm -50...200 °C, τ90: approx. 7 s, no standard	1 m silicon cable max. 180 °C	
AC1916-A-T	Cable probe 60 x 6 mm, waterproof DIN 1.4571 (316TI)-100...180 °C τ90: 185 / 20	2 m PTFE cable max. 180 °C	

Accessories		
Order code		
HC2-PT100-B4	Adapter for Pt100 probes for HP22 and HP23	
AC1960-50	Screw-in measuring sleeve for 3 mm probes Thread 1/4" G Immersion depth 50 mm	
AC1960-100	Screw-in measuring sleeve for 3 mm probes Thread 1/4" G Immersion depth 100 mm	
AC1607-2	Extension cable for Pt100 probes, 4-pin Binder male/female plugs	2 m
AC1607-3	Extension cable for Pt100 probes, 4-pin Binder male/female plugs	3 m
AC1607-5	Extension cable for Pt100 probes, 4-pin Binder male/female plugs	5 m

Pt100 temperature sensors

A Pt100 sensor changes its electrical resistance with every change in temperature. Its value is 100 Ohms at 0 °C. This characteristic is used in a bridge circuit to generate a signal suitable for further processing. Like any manufactured product, a Pt100 sensor is subject to variations. Today there are five accuracy classes by selection: Class B, Class A, 1/3, 1/5 and 1/10. They correspond to tolerances at 0 °C of ±0.3, ±0.15, ±0.1, ±0.06 and ±0.03 °C. The table below illustrates this.

Due to the cost of the selection process, a 1/10 Pt100 sensor is much more expensive than the 1/3 version usually used. The lower adjustment point is normally 0 °C and the tolerance range expands from there. If the adjustment point is then moved to the target temperature, the performance potential available is used and investments in the wrong place avoided. This procedure should not be used for portable Pt100 measuring devices. Another way of obtaining optimum results is to use the probes in a 3 or 4-wire system, thereby eliminating falsification by connection cable resistance. ROTRONIC only uses platinum Pt100 temperature sensors for temperature measurement. To ensure precision measurements, the temperature and humidity sensors should be matched to one another.

Tolerance										
	Class A		Class B		1/3 Class B		1/5 Class B		1/10 Class B	
Temp. °C	± K	± Ω	± K	± Ω	± K	± Ω	± K	± Ω	± K	± Ω
-200	0.55	0.24	1.3	0.56	0.44	0.19	0.26	0.11	0.13	0.06
-100	0.35	0.14	0.8	0.32	0.27	0.11	0.16	0.06	0.08	0.03
0	0.15	0.06	0.3	0.12	0.10	0.04	0.06	0.02	0.03	0.01
100	0.35	0.13	0.8	0.30	0.27	0.10	0.16	0.05	0.08	0.03
200	0.55	0.20	1.3	0.48	0.44	0.16	0.26	0.10	0.13	0.05
300	0.75	0.27	1.8	0.64	0.60	0.21	0.36	0.13	0.18	0.06
400	0.95	0.33	2.3	0.79	0.77	0.26	0.46	0.16	0.23	0.08
500	1.15	0.38	2.8	0.93	0.94	0.31	0.56	0.19	0.28	0.09
600	1.35	0.43	3.3	1.06	1.10	0.35	0.66	0.21	0.33	0.10
650	1.45	0.46	3.6	1.13	1.20	0.38	0.72	0.23	0.36	0.11

NETWORKABLE PRODUCTS

Some models of the new transmitter generation do not provide analogue signals, but have a digital interface. They are used primarily where it is important to record climatic data electronically and to control conditions digitally if necessary.



HF456 SERIES

Applications

Transmitters with integrated probes for HVAC applications, building management systems, museums, libraries, etc.

Highlights and common features

- Measures relative humidity, temperature and dew/frost point
- Range of application electronics: -40...60 °C; -10...60 °C with LCD, 0...100 %rh
- Automatic sensor test & drift compensation *
- Saves up to 2,000 measurement pairs *
- Use as a simulator for system validation *
- UART service interface
- Integrated probe
- USB or Ethernet / Ethernet wireless & RS485 interface
- Configuration, monitoring, calibration via HW4 software / PC
- Display / Keypad (optional)
- Backlight
- Adjustment profile «Standard», factory certificate
- Adjusted at 23 °C and 10, 35, 80 %rh
- Accuracy: ±1 %rh / ±0.2 K
- Power supply possible via RS485 cable
- MODBUS ASCII protocol available



HF456-W SERIES

- Model for wall mounting

HF456-D SERIES

- Model for duct mounting

* Optional, requires HW4 software

HF556 SERIES



Applications

Transmitters with interchangeable probes for HVAC applications, building management systems, museums, libraries, etc.

Highlights and common features

- HygroClip2 probes interchangeable in just a few seconds
- Measures relative humidity & temperature
- Calculates all psychrometric values
- Range of application electronics: -40...60 °C; -10...60 °C with LCD, 0...100 %rh
- Range of application probes: depending on probe used
- Automatic sensor test & drift compensation *
- USB or Ethernet / Ethernet wireless & RS485 interface
- Configuration, monitoring, calibration via HW4 software / PC
- Display / Keypad (optional)
- Backlight
- Adjustment profile «Standard», factory certificate
- Adjusted at 23 °C and 10, 35, 80 %rh
- Precision: depending on the probe used and its adjustment profile
- Power supply possible via RS485 cable



HF556-W SERIES

- Model for wall mounting with interchangeable probes

HF556-D SERIES

- Model for duct mounting with interchangeable probes

* Requires HW4 software







HF656 SERIES

Applications

HVAC applications, building management systems, museums, libraries, etc.

The technical specifications correspond to those for the HF4x and HF5x series

Highlights and common features

- Measures relative humidity, temperature and dew/frost point
- Range of application electronics: -40...60 °C; -10...60 °C with LCD, 0...100 %rh
- Automatic sensor test & drift compensation *
- Saves up to 2,000 measurement pairs *
- Use as a simulator for system validation *
- UART service interface
- Integrated probe
- USB or Ethernet / wireless & RS485 interface
- Connection to PC via HW4 software
- Mains voltage or low voltage power supply
- Adjustment profile «Standard», factory certificate
- Adjusted at 23 °C and 10, 35, 80 %rh
- Accuracy: ±1 %rh / ±0.2 K
- MODBUS ASCII protocol available

HF656-W

- Wall mount with display (optional)

HF656-C

- Wall mount with fixed cable probe and display (optional)

HF656-D

- Duct mounting with fixed probe and display (optional)

* Optional, requires HW4 software

Order information HF456, HF556 and HF65x							
Power supply and probe type							
HF456-							15...40 VDC / 12...28 VAC, integrated probe
HF556-							15...40 VDC / 12...28 VAC, interchangeable probes from the HygroClip2 series
HF656-							15...40 VDC / 12...28 VAC, integrated probe
HF658-							85...264 VAC, integrated probe
Instrument type							
	D		**X**				Duct probe, Ø 15 x 208 mm (standard, without display)
	W						Wall probe, Ø 15 x 85 mm (standard)
	2						Only HF 65xx: PPS cable probe Ø 15 mm, 2 m cable
Parameters to interface							
HF456-/HF556-		**X**					Humidity & temperature
HF65x-		**X**					Humidity & temperature
HF456-/HF556-		**1**					Humidity & temperature & dew point/frost point
HF65x-		**1**					Humidity & temperature & dew point/frost point
HF556-		**2**					Humidity & wet-bulb temperature (Tw) in °C
HF556-		**3**					Humidity & temperature & enthalpy (H) in kJ/kg
HF556-		**4**					Humidity & temperature & specific humidity (Q) in g/kg
HF556-		**5**					Humidity & temperature & absolute humidity (Dv) in g/m3
HF556-		**6**					Humidity & temperature & mixing ratio (R) in g/kg
HF556-		**7**					Humidity & temperature & saturated water vapour pressure (Dvs)in hPa
HF556-		**8**					Humidity & temperature & partial water vapor pressure (E) in hPa
HF556-		**9**					Humidity & temperature & partial water pressure (Ew) in hPa
Optional display							
			D				Display with backlight
			X				No display
Probe extension (only HF65x)							
				S			Standard length: 85 mm (type W), 100 mm (type 2), 208 mm (type D)
				1			Standard length +150 mm
Electrical connections & interface configuration (all types in horizontal mounting)							
					5		RS485 interface to terminals, M16 x 1.5 cable gland
					6		RS485 interface to terminals, ½" conduit adapter
					7		USB & RS485, M16 x 1.5 cable gland
					8		USB & RS485, ½" conduit adapter
					9		Ethernet RJ45 & RS485, M16 x 1.5 cable gland
					A		Ethernet RJ45, ½" conduit adapter
					B		Ethernet wireless & RS485, M16 x 1.5 cable gland
					C		Ethernet wireless, ½" conduit adapter
HF4x-/HF6x-					**D**		Only HF4x and HF6x: Modbus ASCII to terminals, M16 x 1.5 cable gland
HF4x-/HF6x-					**E**		Only HF4x and HF6x: Modbus ASCII to terminals, ½" conduit adapter
Units of the output parameters							
						M	Metric units
						E	English units

General information			
Specifications	HF456	HF556	HF656
Supply voltage	5...40 VDC /12...28 VAC 50/60 Hz		
Current consumption	USB interface: 50 mA, TCP/IP interface: 300 mA		
Electrical connections	Screw terminals and M16 cable gland or ½" conduit adapter plus USB or RJ45 connector		
Humidity measurement	HF456	HF556	HF656
Sensor	Hygromer® IN-1	Depending on probe	Hygromer® IN-1
Measurement range	0...100 %rh		
Accuracy at 23 °C	±0.8 %rh	Depending on probe	±0.8 %rh
Repeatability	0.3 %rh		
Long term stability	<1 %rh/year		
Response time	Typically 10 s for 63% of a change 35>80 %rh (1 m/sec air flow at sensor)		
Temperature measurement	HF456	HF556	HF656
Sensor	Pt100 1/3 Class B	Depending on probe	Pt100 1/3 Class B
Measurement range	-50...100 °C / -58...212 °F	Depending on probe	-100...150 °C / -148...302 °F
Accuracy at 23 °C	±0.2 K	±0.1 K, depending on probe	±0.2 K
Repeatability	0.05 K		
Long term stability	<0.1 °C/year		
Response time	Typically 4 s for 63 % of a change from 23 to 80 °C (1 m/sec air flow at sensor)		
Calculated parameters	HF456	HF556	HF656
Psychrometric calculations	Dew point or frost point	All calculations available	
Digital interface	HF456	HF556	HF656
Communication interface	USB & RS485 or Ethernet TCP/IP (cable connection or wireless) & RS485 or MODBUS ASCII		
Start-up time and refresh rate	HF456	HF556	HF656
Start-up time	Typically 1.9 s		
Type of interface	UART (universal asynchronous receiver transmitter) on mini USB		
Service cable maximum length	5 m (16.4 ft)		
General specifications	HF456	HF556	HF656
Optional display	LCD, 1 or 2 decimals, with backlight and trend indicators		
Probe material	Polycarbonate		
Housing material / Protection	ABS / IP 20		
Weight	Approx. 300 g		
CE/EMC compatibility	EMC Directive 2004/108/EC: EN 61000-6-1: 2001, EN 61000-6-2: 2005 EN 61000-6-3: 2005, EN 61000-6-4: 2001 + A11		
Solder	Lead-free (RoHS-compliant)		
Fire resistance	Conforms to UL94-HB		
FDA/GAMP compatibility	Conforms to FDA 21 CFR Part 11 and GAMP4		
Electronics operating range	-40...60 °C / -10...60 °C (models with display) 0...100 %rh, non-condensing		

Digital interfaces

HygroClip2 probes can be integrated directly into Ethernet networks with data loggers and/or transmitters with the inexpensive AC3005 TCP/IP interfaces.

One HygroClip HC2 probe an be connected to an AC3005 interface.
The user-friendly HW4 software is used for device management and configuration. Adjustment and calibration are also possible directly via the network.

Active TCP/IP adapter

Applications

Monitoring applications without local data recording via TCP/IP with a measuring point per place of use

Use

WIth all HygroClip2 probes



Highlights and common features

- Simple networking via Internet, directly connectable
- Compatible with HW4 software
- Open protocol, can also be operated with third-party software



AC3005

Order code AC3005

- 1 probe input for HC2-x probes
- TCP/IP interface
- Operation with AC1211 power adapter



AC0001

Order code AC0001

- Standard Ethernet patch cable for connection to an RJ45 interface

AC0005

Order code AC0005

- Crossover Ethernet patch cable

SOFTWARE



Software overview

The new ROTRONIC devices are equipped with a practical interface for configuration of the devices and for the display and recording of data. The ROTRONIC HW4 software is one of the most comprehensive and user-friendly validated software packages available on the market today. It is not possible to describe the functionality of the software in full detail here.

A free trial version can be downloaded on the Internet from: www.rotronic-humidity.com

HW4 Trial Trial version

- Product key: 05 xxx
- Full functionality of the Professional Edition, including OPC functions
- Limited trial period of max. 30 days

HW4-E Single-user applications

- Product key: 24 xxx Standard Edition
- Display of an unlimited number of loggers and measured values
- Monitoring (one device at a time), data logger programming, data retrieval, scaling, device settings, alarm function, service and configuration tool for ROTRONIC devices, date/time synchronisation, adjustment and calibration of ROTRONIC probes
- No password protection

HW4-P Networked applications in the pharmaceutical and food industries

- Product key: 64 xxx Professional Edition
- All functions of the Standard Edition
- Fulfils the requirements for electronic data records and signatures (FDA 21 CFR Part 11, Annex 11)
- Grouping of devices, graph overlays, printing of reports

HW4-OPC Networked applications with integration in customer's software programs

- Product key: 88 xxx
- All functions of the Professional Edition
- Contains an OPC server with which the data can be integrated into the customer's own software

HW4-VAL For users subject to regulatory requirements (GxP)

- Product key: 12 xxx
- As HW4 OPC
- Includes «HW4 e-compliance package». This comprehensive documentation tool supports the user in the qualification/validation of HW4-based solutions

Qualification / Computerised system validation

Data integrity and security are of essential importance today. Companies in the food, pharmaceutical and medical technology industries must prove that their data are measured and managed reliably. For this they need software and devices that can be validated. Combining ROTRONIC's HW4-compatible devices and HW4 software, ROTRONIC supplies a solution in which validation plays a central role. The devices and software are validated and compatible with FDA 21 CFR Part 11 (directive of the US Food and Drug Administration, FDA) and GxP.

rotronic

COMPLIANCE DECLARATION
DV04-30.787.03-1_11
for
Software
HW4 version 2.0.1.15990

Physical devices
HygroLogNT: firmware release 1.2
Docking stations for the HygroLog NT:
DS-NT4, DS-NT4-WL, DS-U1; DS-U2, DS-U4, DS-U4-4-4-20, DS-U4-WL: v 1.4
DS-PT2, DS-PT4, DS-PT4-WL: v1.1
DS-R1 : v1.0
DS-U4WEB : v1.0
HygroFlex, HygroFlex M, HygroLab, HygroPalm, M23, M33: firmware release 4.0
HygroClip DI firmware version 1
HygroClip Alarm firmware version 2
Hygrostat MB firmware version 1

We attest that the validated version of the Rotronic HW4 software and associated devices fulfil the requirements defined in the Rotronic ERES White Paper, version 2.0, based on the following paragraphs:

21 CFR Part 11
21 CFR 110
21 CFR 210, 21 CFR 211
EU Annex 11 to the
EU Guidelines of Good Manufacturing Practice for Medicinal Products

validated by ROTRONIC Instrument Corp.
Inspected by Kereon AG,
August 2007

The HW4 software and devices have been reviewed against the specifications and the ERES White Paper, version 1.0, in order to provide evidence that the above mentioned regulations are fulfilled accordingly.

The measuring devices and the software have been validated and verified against the specifications provided by the manufacturer.

Inspected by Yves Samson
Kereon AG

Accepted by the manufacturer
ROTRONIC AG

HW4 functions

Viewing of measured values/Monitoring

Viewing of measured values is very easy and user-friendly. Files of any device shown in the device tree can be copied and opened directly with the HW4 explorer. The data is presented as required in either table or graph form. Both the table and the graph are shown for online monitoring.

The graph module can be configured by the user.



File formats/Handling of data/Export functions

The file formats can be defined by the user. The formats .xls and .log are available for log files. The .log format saves the data in a binary format that can only be read by HW4, while the .xls format can be opened with an editor or Excel. The data can also be exported in other formats.

Archiving of data

The data can be written automatically into different files. For example, the user can configure the system to create a new file every hour, day, week, month or after 200,000 measurements.



Analysis and calculation tool/Psychrometric calculations

All ROTRONIC devices measure relative humidity in %rh and temperature in °C/°F. These two values can be used to calculate other psychrometric values such as dew point, mixing ratio, enthalpy and wet-bulb temperature. The calculation module of the HW4 software uses WMO* verified formulas for these calculations and allows the user to define their own parameters (e.g. mixing ratio ratio & temperature) as input values in order to calculate the relative humidity from them. Other advanced options such as dew/frost point differentiation are also included.

* WMO = World Meteorological Organisation

Statistical functions



For many users detailed data, which can be very extensive, is not necessarily of much interest. For them it is merely important that the measured values lie within a certain range. This is the role of the statistical function. It shows the following values:

- Minimum
- Maximum
- Mean
- Standard deviation
- Number of measured values
- Mean kinetic temperature

Printing of reports



If required, reports can be printed as desired or copied into other software for reporting, emailing etc.

Users and passwords

User names and passwords may be assigned freely (HW4-P). Every user can be granted different rights. Users that have been deleted cannot be recreated under the same name.

Alarms

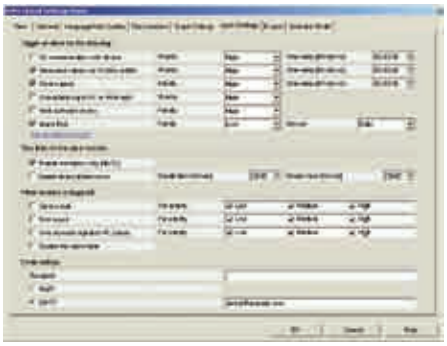

In monitoring mode HW4 can trigger an alarm when certain events occur. Such an event can be when a device or a file storage path is not available, when a software error occurs, when measured values lie outside defined limits or when a data logger sends an error message. The alarms can be shown on the screen and/or printed out. Audible alarms are also possible. HW4 is even able to send an e-mail to one or more recipients (HW4-P).

OPC*server

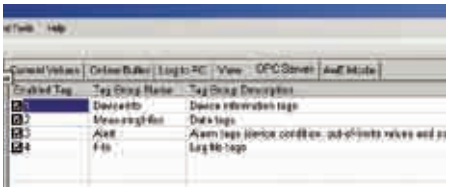

HW4-OPC contains an OPC server with which the measured values can be integrated into the customer's own software.

* Object Linking and Embedding for Process Control

SERVICES



Calibration

Even though ROTRONIC instruments have excellent long term stability, we recommend that probes are calibrated regularly, typically once per year is sufficient. More frequent calibration and maintenance can be necessary if the probes are used in polluted/contaminated atmospheres. If in doubt ask, we will be glad to advise you.

Humidity and temperature measuring devices are precision instruments that must be serviced regularly in order to retain their reliability. Measurement errors can cause considerable damage in the production and storage of products. In-company and national/international standards require regular calibration. ISO standards obligate companies to check their measuring devices on a regular basis. Regulatory authorities (e.g. FDA, EMEA, Swissmedic) also demand that measuring devices be calibrated with traceability to national standards.

What are the calibration options?

a) Calibration at ROTRONIC AG

As a calibration laboratory accredited by METAS (Metrology and Accreditation Switzerland) for the parameters of relative humidity and temperature, we can offer you calibration services and Swiss Calibration Service (SCS) certificates in conformity with the national standard.

b) You calibrate your devices yourself – with your own calibration device and SCS-certified humidity standards or a humidity/temperature generator from the HygroGen series.

You can find further information on these products in the chapter Calibration (page 88).

c) We come to you – our Calibration Mobile saves you time and trouble*.

Use of our Calibration Mobile is economical upwards of ~15 measuring devices. It is interesting for customers who need to calibrate regularly, but who want to keep the work and costs for this within bounds. We offer this service in the following countries: A, B, CZ, CH, D, DK, F, I, NL, P.



*The Calibration Mobile is only available in certain European countries.

Our mobile calibration service at your premises with our Calibration Mobile saves you practically all the administrative and operational work and expense of shipping of the measuring devices and the consequential delay. Our technician calibrates the instruments in our Calibration Mobile and can return them back into your process in a matter of hours. This method is particularly interesting for customers who still use measuring devices with integrated probes. The interchangeable HygroClip probes allow practically interruption-free operation in every process. They can be replaced within seconds. In this way you can achieve a maximum in efficiency with a minimum number of probes.

Service division

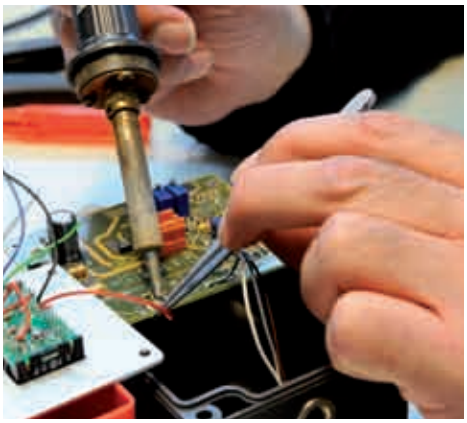

We are able to repair your devices should they become defective. Our service division with its experienced and well-trained staff will repair your defective device quickly and competently.

Engineering

ROTRONIC also offers engineering services, for example

Humidity and temperature mapping
In many companies in the pharmaceutical and food industries it is necessary to document climatic conditions in production and, primarily, storage rooms. Often it is not clear where the readings should be taken and how many devices are necessary for this. ROTRONIC offers a mapping service for this:

To this end we set up data loggers at your premises to record temperature and humidity conditions and gradients. Using the measured data we can generate reports and make recommendations regarding the installation of instrumentation and control equipment and correct placement of data loggers for on-going measurements.
On request ROTRONIC will design your measuring system.



System validation

Data loggers and measuring systems as well as the HW4 software from ROTRONIC are validated according to FDA 21 CFR Part 11 and GAMP4. On request we will validate your system. Ask us for a proposal.

The systems can be installed by you, us or one of our partners. Just ask us, we will be glad to advise you.

In countries outside Switzerland: contact one of our subsidiaries or distributors. You can find their addresses at www.rotronic-humidity.com.

CALIBRATION



Even though ROTRONIC probes have excellent long term stability , we recommend that they have their calibration checked regularly. One calibration per year normally suffices. Some of our customers calibrate their probes more often; the range of calibration intervals extends from once a year to calibration before every measurement – depending on internal quality assurance rules.

The long term stability of ROTRONIC probes is better than 1%rh per year under normal conditions. Normal conditions exist when the concentration of contaminants/pollutants in the air does not exceed maximum allowable concentration (MAC) levels.

Why is calibration essential?

Many companies today work to ISO 9000 standards and are therefore obligated to calibrate their measuring equipment on a regular basis. Regulatory authorities such as the US FDA, EMA, Swissmedic, etc. also demand that devices be calibrated with traceability to national standards. In some situations, internal company quality standards may also specify that a specific measurement uncertainty must be demonstrated and that this must be verifiable at all times. It is therefore in the interest of every user to have equipment calibrated and adjusted regularly in order to obtain the best-possible quality. We offer calibration devices for all our probes. We can even supply you with suitable devices for calibration of probes from other manufacturers. Our competitors trust our humidity standards. Please contact us regarding custom-made products.



Accredited calibration laboratory for humidity and temperature SCS 065

As a calibration laboratory accredited by METAS (Metrology and Accreditation Switzerland) for the parameters of relative humidity and temperature, we can offer you calibration services and Swiss Calibration Service (SCS) certificates in conformity with the national standard. Accreditations and certificates are acknowledged reciprocally by most national organisations (ILAC – MRA).

SCS* HUMIDITY STANDARDS

ROTRONIC humidity standards are delivered in packs of five ampoules of the same humidity value. Every ampoule is marked with its humidity value and a serial number. The most frequently used values are 35 and 80 %rh, which are used for two-point calibrations. All ampoules except for the 0 %rh standard contain an unsaturated salt solution; the 0 %rh standard consists of a highly porous molecular sieve. An SCS certificate documenting traceability to national standard and specifying the uncertainty of the humidity standard is enclosed with every pack. The different national agencies for metrology recognise each others' certificates reciprocally through the ILAC Mutual Recognition Agreement. As a result, an instrument calibration certificate from Switzerland (SCS) is accepted worldwide by local certification bodies.





Order information		
Order code	Humidity value	Uncertainty at 23 ± 2°C
EA00-SCS	0.5 %rh	± 0.1 %rh
EA05-SCS	5.0 %rh	± 0.1 %rh
EA10-SCS	10.0 %rh	± 0.3 %rh
EA11-SCS	11.3 %rh	± 0.3 %rh
EA20 SCS	20.0 %rh	± 0.3 %rh
EA35-SCS	35.0 %rh	± 0.5 %rh
EA50-SCS	50.0 %rh	± 0.9 %rh
EA65-SCS	65.0 %rh	± 0.9 %rh
EA75-SCS	75.3 %rh	± 0.9 %rh
EA80-SCS	80.0 %rh	± 1.2 %rh
EA95-SCS	95.0 %rh	± 1.2 %rh

Other values on request



DPH 911
Reference dew point mirror for certification of SCS* humidity standards

PROBE CALIBRATION BY SOFTWARE AND CALIBRATION INTERFACE

ROTRONIC probes can be calibrated and adjusted via the connected instrument with either an integrated keypad or a calibration interface to a PC running HW4 software.

* SCS: Swiss Calibration Service

Calibration devices

ROTRONIC calibration devices are small, airtight chambers that precisely fit ROTRONIC probes. The lower part of the device consists of a screw-on lid into which the humidity standard is poured onto an absorbent textile pad. The specified humidity is generated in the calibration device after a stabilisation period of 30...180 minutes. The probe can then be calibrated or adjusted in comparison with the reference value of the humidity standard.

We can also supply calibration devices suitable for other manufacturers probes, provided they are cylindrical, and have a leak proof construction. Ask us for a recommendation!

Calibration devices perform at their best only if they are properly maintained. Wash the calibration devices carefully after use, and let them dry. Make sure that no salt deposits form inside the device or threads, as this may cause errors. Worn O-rings should be replaced.

Order code	Use		Order code	Use	
Push-on calibration devices. Gasket with O-ring and thumb screw					
ER-15	For 1 probe Ø 14...15 mm Brass, nickel-plated		ERV-15	For 1 probe Ø 14...15 mm Vertical calibration position Brass, nickel-plated	
EDM 15/15	For 2 probes Ø 14...15 mm Brass, nickel-plated		EGL	For 1 probe Ø 10 mm Brass, nickel-plated	
ER-05	For 1 probe Ø 4...5 mm Brass, nickel-plated		ER-18K	For 1 probe Ø 18 mm Brass, nickel-plated	
ER-20K	For 1 probe Ø 20 mm Brass, nickel-plated		ER-10-MS	For 1 probe HF3x, L1x-S, M1x-S series Vertical calibration position Aluminium, anodised	
Screw-on calibration devices. Gasket with seal face on probe. Cannot be used for HC2-S probes					
EDM 15/25	For 2 probes 1 x Ø 15 mm (M12 x 1.5) 1 x Ø 25 mm (PG11) Brass, nickel-plated		EM-15	For 1 probe Ø 15 mm (M12 x 1.5) Brass, nickel-plated	
EM-25	For 1 probe Ø 25 mm (PG11) Brass, nickel-plated		EMV-15	For 1 probe Ø 15 mm (M12 x 1.5) Vertical calibration position Aluminium, anodised	
EMV-25	For 1 probe Ø 25 mm (PG11) Vertical calibration pos. Aluminium, anodised		EM-G	For probe types E, HP...IE... Screw-on probes (½"G)	
Calibration devices for special probes					
EBFC	For plate probes Types BFC & BFC-DIO Aluminium, anodised		WP14-S	For bell probes: AWD, AWVC, AW-DIO Stainless steel, DIN 1.4401/POM	
EGS	For all sword probes Aluminium, anodised	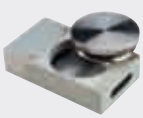			

Portable ROTRONIC humidity generator

HygroGen® is a portable humidity/temperature generator that can be used in laboratories, workshops or on-site where instruments are used. The speed of generation and simple operation makes it ideal for HVAC service technicians as well as for customers who wish to calibrate a large number of probes inexpensively and easily themselves. There are three models available.

Main features

- Generates a controlled reference environment
- Fully integrated temperature control *
- Suitable for all humidity/temperature probes
- Self-contained – needs only a mains socket
- Measurement chamber for up to 5 probes
- Large control range
- Equilibrium humidity reached quickly
- Portable, stainless steel housing

* Except HygroGen 0

Your benefits

- Any value can be set
- Large temperature range
- Reduces calibration time and costs
- Easy to use, no installation required
- Simultaneous calibration of up to 5 instruments
- Also suitable for extreme values
- Saves time
- Mobile use

The HygroGen uses a mixed flow method to generate the humidity required by the user. A desiccant is used to generate low humidity, and a saturator to generate high humidity. The temperature is controlled using a Peltier element (except for HygroGen 0). Measurement and control are effected by a combination of a ROTRONIC HygroClip probe and a multi-loop controller. Set-points can be entered easily either with the keys of the multi-loop controller or via the standard Ethernet interface and software.

The key advantages of the HygroGen devices are the speed with which the set values are reached and their high control stability. This means a multi-point calibration can be performed in a matter of minutes, rather than hours. A further feature of the calibration chamber is the availability of two additional probe connections at which calibrated reference probes can be connected.



Probe options

The HygroGen chamber contains three connection sockets for the control and optional monitoring probes. A HygroClip probe is used for control of the humidity and a special Pt100 direct HygroClip for temperature. Depending on the application, a variety of different configurations are possible; the most common configuration is a second HygroClip probe in the third socket for monitoring purposes. When a HygroClip probe is used, the digital output signal socket at the back of the HygroGen can be used to connect a HygroLab or HygroPalm indicator.



HygroGen series



HygroGen 1A

This self-contained humidity generator for calibration of humidity measuring devices only needs a mains power socket and is light enough at 17 kg to be portable for on-site use.

The wide control range of 5...95 %rh / 5...50 °C and extremely high control stability make the HygroGen indispensable wherever there is a need for fast and precise calibration.

HygroGen 2A

The HygroGen 2A is equipped with a sampling loop and pump for connection of a reference dew point mirror. The maximum dew point is limited by the ambient temperature to which the lines of the sampling loop are exposed.

HygroGen 0

The HygroGen 0 does not include active temperature control of the chamber. The ambient conditions therefore define the chamber temperature, with carefully designed ventilators ensuring the best-possible homogeneity.

Order number: see table on next page.

Technical data and order information			
Specifications	HygroGen 0	HygroGen 1A	HygroGen 2A
Maximum control range	5...95 %rh	5...95 %rh and 5...50 °C (optional 0 °C ...60 °C)	
Minimum control range	10...90 %rh in a range of 10...30 °C	10...90 %rh in a range of 10...50 °C	
Control stability	≤ ± 0.2 %rh	≤ ± 0.2 %rh, 0.1 °C (at 23 °C) 0.2 °C (complete range)	
Temperature gradient	≤ ~0.2 °C (5...50°C) <0.1at 23 °C		
Set-point stabilisation time	2 minutes (35 / 80 %rh humidity change, 23 °C)	2 minutes (35 / 80 %rh humidity change, 23 °C), 10 minutes (23 / 45 °C temperature change)	
Reference probe	HygroClip S1 calibrated at 5, 23 & 50 °C, 10, 35, 65 & 95 %rh, verifiable to SCS standard (UK: UKAS)		
Precision of reference probe	≤ ±1.0 %rh (10...95 %rh) ±0.2 K		
Pump and connections for sampling loop	No	Yes	
External interfaces	Ethernet, ROTRONIC DIO (two additional connections fitted)		
Desiccant	Molecular sieve, user refillable		
Saturator	Humidifier with front filling. Low water level warning on controller display		
Chamber volume	Approx. 2 litres		
Housing / Dimensions	Stainless steel / 455 x 420 x 212 mm (max.)		
Ambient conditions	Max. 80 %rh at 10...30 °C	Max. 80 %rh for temperatures up to 31 °C, decreasing linearly to 50 %rh at 40 °C Indoor use only. Altitude to 2,000 m above sea level	
Weight	15 kg	17 kg	17.5 kg
Power supply	110/230 VAC, 3 A 50/60 Hz		
Certification marks	EN61326: 1998, EN61000-3-2: 2000, EN61000-3-3: 1995, EN61010-1: 2001		

Technical data and order information	
Order code	Specifications
HygroGen 1A	Humidity and temperature calibrator with 1x HG-DC, 1x HG-FILL, instruction manual. Order chamber door(s) separately.
HygroGen 2A	Humidity and temperature calibrator with connection for sampling loop and pump for connection of a dew point mirror with 1x HG-DC, 1x HG-FILL, instruction manual. Order chamber door(s) separately.
HygroGen 0	Humidity calibrator with 1x HG-DC, 1x HG-FILL, instruction manual. Order chamber door(s) separately.
Accessories, spare parts and upgrades	
HG-D-11234	Chamber door for five probes, Ø 25, 20, 15, 15 and 10 mm, including plugs
HG-D-11111	Chamber door for five Ø 15 mm probes, including plugs
HG-D-xxxxx	Chamber door for max. five probes, custom configuration, including bungs. See table below for the configurations.
HG-DP-99999	Clear chamber door with five adjustable probe fittings for probes with 9...17 mm Ø
HG-D-99999	Insulated chamber door with five adjustable probe fittings for probes with 9...17 mm Ø
HG-DP-00000	Clear chamber door without openings, for calibration of, for example, data loggers with displays
HG-Bxx	Customer-specified plug (xx = probe diameter per table below)
HG-B25A	25 mm plug with 6 mm hole for Pt100 or cable
HG-DC	Desiccant cartridge, filled with molecular sieve desiccant
HG-DES	Desiccant refill pack (molecular sieve)
HG-FILL	Fill tube and syringe
HG-CON	Spare/Replacement controller, preconfigured and with backup disk
HG-TC	HygroGen heavy duty transit case
HG-ICS	Inner chamber sleeve (spare part)
HG-ITOOLS	PC software for controller; enables PC view of controller set-points, charting of set-points and process variables and firmware updates
11.01.6218	RS232 cable, HygroGen controller to PC
B5-02-B5	Interface cable for control/reference probe to HygroLab or HygroPalm 2/3
HG-OC	Upgrade to 0 °C (only in combination with a service)
HG-60C	Upgrade to 60 °C (only in combination with a service)
HG-RSF	Upgrade to ramp/soak function (only in combination with a service)
Probe & display options	
HygroClip-S1	Control or reference probe with SCS (Swiss Calibration Service) calibration certificate, one included as standard
HygroLab 2	Benchtop display unit for control/reference probes (needs 1x B5-02-B5 per probe)
AC1207	Mains adapter for HygroLab (required)
HygroPalm 2	Handheld display unit for control/reference probes (needs 1x B5-02-B5 per probe)

Order numbers for chamber doors and bungs																		
x =	1	2	3	4	5	6	7	8	9	A	B	C	D	E	F	G	H	I
Ø (mm)	15	20	25	10	5	12	18	30	9-17	6	4	22	23	13	19	21	18.5	18.2
Example:	**HG-D-11234**			Door for 2 x 15 mm, 1 x 25 mm, 1 x 20 mm, 1 x 10 mm probes, with bungs														
	HG-B-7			Bung 18 mm Ø														

Other dimensions available on request

Humidity standards and certificates



CERTIFICATE OF FACTORY CALIBRATION ROTRONIC AG

Art No:	HC2-S
Serial No:	0060263937
RPC:	1-0048785472

ROTRONIC AG certifies that this instrument meets the published specifications. It has been calibrated using standards and instruments as stated below and corresponds to the test requirements of ISO 9001:2000. The reference and service standards are traceable to national standards. The calibrated values are valid under the below conditions only at the time of measurement and are referenced to the indicated references and working standards.

Reference system
RAG-THUNDER-1

Temperature adjustment [°C]

	Adjusted
1	-0.10

Humidity adjustment [%rh]

	Adjusted	@ Temp[°C]
1	34.85	23.53
2	22.24	23.52
3	76.94	23.64

Temperature calibration [°C]

	Reference	Calibrated
1	23.52	23.45

Humidity calibration [%rh]

	Reference	Calibrated	@ Temp[°C]
1	78.76	78.76	23.62

Calibration Date: 12.12.2008

Finaltest - CH-8303 Bassersdorf, 16.12.2008, Document: -, Inspector: F Wolfensberger

Factory Adjustment Certificate

All ROTRONIC probes are delivered with a factory adjustment certificate.

In addition to the probe type and serial number, the certificates show the ambient temperature, adjustment points, inspection equipment used and the date of calibration.

A factory adjustment certificate normally suffices for companies outside the pharmaceutical, chemical and food industries.

SCS* certificate

* SCS = Swiss Calibration Service

SCS certificates are required primarily by companies in the pharmaceutical, chemical and food industries. As an accredited calibration laboratory for relative humidity and temperature, we are able to perform SCS calibrations with the best possible measurement uncertainty. ROTRONIC is accredited by METAS (Metrology and Accreditation Switzerland) with the number SCS 065.



rotronic

SCS 065

KALIBRIERZERTIFIKAT / CALIBRATION CERTIFICATE



ROTRONIC AG

KALIBRIER-PROTOKOLL
CALIBRATION-PROTOCOL

PRÜFLING / CALIBRATED INSTRUMENT

WERTE-TABELLE / DATA TABLE

OEM PRODUCTS

Original equipment manufacturers (OEM) require individual solutions to suit the needs of their customers. ROTRONIC has been producing customized humidity measurement products for the OEM market for many years and therefore has wide experience in the field. We are able to meet virtually every requirement. Our OEM capabilities today are greater than ever before. Regardless of whether you need a simple sensor or a complex industrial transmitter – we have a solution for you.

The new HygroClip2 (HC2) probes, which are based on the revolutionary AirChip3000 technology, are especially interesting for OEM manufacturers. On the one hand they stand out for their compact dimensions and superb precision at a reasonable price, while on the other, the universal UART interface and freely scalable 0...1 V analogue outputs make them easy to intgegrate with systems.

Different customers rarely have the same requirements. The key to success therefore lies in the flexibility with which specific wishes can be realised. Since every project has different requirements, our experienced team first discusses the objectives, technical requirements and target costs in an initial meeting and then works out a proposal based on these discussions. Once the final specification has been agreed, prototypes are built for testing and technical approval. During this phase ROTRONIC can support the customer in assessing the stability of the product and, if required, also carry out tests in our own accredited test facilities. We can naturally also advise on final assembly and calibration if required. Wherever possible, we use existing products or sub-assemblies for the manufacture of customised devices. This results in significant savings in design and development costs and also saves time. Time-consuming tests can then often also be dispensed with.

OEM CABLE PROBES

Applications

HVAC, food stocks, health inspection agencies, agriculture, OEM and meteorology applications, etc.

Use

Handheld devices, data loggers, transmitters, OEM products

Highlights and common features

- Measures humidity, temperature and dew point
- Hygromer® V-1 sensor
- Polypropylene filter
- Integral 2000 measurement pair data logging (requires HW4 software)
- Application range 0...100 %rh / -40...85 °C
- UART interface and freely scalable analogue signals 0...1 V
- Standard scaling 0...1 V = 0...100 %rh / -40...60 °C





For many manufacturers our OEM probes are an inexpensive alternative to the development of their own instruments, and avoid the need for assembly and calibration costs. The table below illustrates the range of configurations available.

OEM PROBES TYPE XA

- Factory adjusted at 23 °C and 10, 35, 80 %rh
- Accuracy: ±1 %rh / ±0.2 K

Analogue OEM cable probes of the type XA														
Device type														
XA														OEM probe with UART configuration interface
	C	2-												Cable probe, black (polycarbonate) with black system cable
	E	1-												Screw-in probe 1/2" gas thread
	E	3-												Screw-in probe 1/2" NPT thread
Cable length														
			1											1 m, open ends
			2											2 m, open ends
Power supply and output signal type														
				0	X									*2- or 2 x 2-wire, <28 VDC, common V+ 4...20 mA, max. 100 °C
				1	X									*3/4-wire (5...35 VDC / 12...24 VAC, 0...20 mA, max. 100 °C)
				2	X									*3/4-wire (5...35 VDC / 12...24 VAC, 4...20 mA, max. 100 °C)
				3	X									3/4-wire (5...35 VDC / 12...24 VAC, 0...1 V, max. 100 °C)
				4	X									3/4-wire (5...35 VDC / 12...24 VAC, 0...5 V, max. 100 °C)
Sensor														
						I								IN-1
						V								V-1
						H								HH-1
Filter														
							P	E						Polyethylene filter, 20 µm, grey
Output parameters														
									B			X	X	Humidity and temperature
									H	X	X			Only humidity
									T					Only temperature
									1					Humidity and frost point
									A					Temperature and frost point
Scaling of the output signals (humidity: always 0...100 %rh)														
										X	X			No temperature output signal
										1	X			0...+50 °C / 0...100 %rh
										2	X			10...+40 °C / 0...100 %rh
										3	X			-40...+60 °C / 0...100 %rh
										4	X			-30...+70 °C / 0...100 %rh
										5	X			-40...+85 °C/ 0...100 %rh
										6	X			0...100 °F / 0...100 %rh
										7	X			0...200 °F / 0...100 %rh
Standard scaling dew point / frost point														
												X	X	No calculation
												B	X	-50...50

* In these probes the electronics are separated from the sensors by a 0.25 m cable. This prevents measurement errors by possible self-heating.

We can manufacture further products, such as digital versions and other scaling possibilities, to suit your needs.

H290 TRANSMITTER SUB-ASSEMBLY

H290 is an OEM humidity and temperature measuring system with impressive specifications. It is particularly suitable for applications such as climatic chambers and drying systems. It can be supplied as a probe and PCB combination for fitting in the customer's own enclosures or housings. H290 delivers a linear output signal of 4...20 mA or 0...10 V from a power supply of 10...35 VDC or 12...24 VAC. Temperature is measured by a Pt100 or thermistor, depending on the customer's requirements. H290 is equipped with a temperature compensation system with integrated cable length compensation for operation in a large range of -100...200 °C. This means exact measurements are obtained regardless of the temperature or differential in temperature between sensor and electronics.

We are able to fulfill customer wishes for special versions, housings and probes in almost every variant. Just ask us!





SENSORS

HYGROMER® IN-1

For industrial applications where there is a risk of corrosion

- Response time <15 s
- 6 x 19 mm
- 0...100 %rh / -50...200 °C
- Surface protection: Teflon



HYGROMER® WA-1

General water activity measurements

- Response time <15 s
- 7 x 14 mm
- 0...100 %rh / -50...200 °C
- Surface protection: Teflon



HYGROMER® V-1

High humidity environments, long phases of condensation, large temperature changes, agriculture, meteorological stations

- Response time <15 s
- 7 x 21 mm
- 0...100 %rh / -50...200 °C
- Surface protection: Teflon





HYGROMER® M3-R

Extremely fast sensor for weather balloons and other applications with fast temperature and humidity changes: handheld devices, process automation systems

- Response time ‹3 s
- 5.5 x 14 mm
- 0...100 %rh / -80°... + 150°C
- Special protective frame for very high air velocities



HYGROMER® M1-SK

Similar to M3-R, but with surface protection

- Response time ‹3 s
- 7.5 x 20 mm
- 0...100 %rh / -80...140 °C
- Special electrodes with reinforced connections and surface protection



HYGROMER® HH-1

Corrosion-resistant sensor for measurements in environments with hydrogen peroxide, sterilisers, autoclaves, etc.

- Response time ‹10 s
- 5.5 x 14 mm
- 0...100 %rh / -80...200 °C
- Special electrodes with reinforced connections
- No surface protection

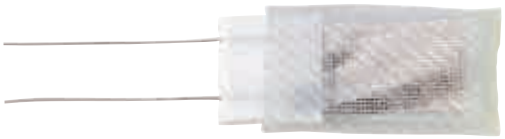

HYGROMER® HH1-SK

Similar to HH-1, but with surface protection

- Response time ‹12 s
- 8 x 15 mm
- 0...100 %rh / -80...140 °C
- Special electrodes with reinforced connections and surface protection

EXAMPLES OF OEM PRODUCTS:









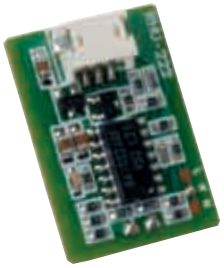

ACCESSORIES

Filters

We have a range of filters available for optimum protection of the sensors. By choosing the right filter, you will obtain optimum performance regarding sensor protection and probe response times.

Technical data and order information for filters

Order code	Probe	Material / Filter carrier	Filter element	
NSP-PCB-PE **NSP-PCB-PE40** **NSP-PCB-WM** **NSP-PCB-TF**	HC2-S	Polycarbonate, black	Polyethylene, grey Polyethylene, white Wire mesh Teflon	
NSP-PCW-PE **NSP-PCW-PE40** **NSP-PCW-WM** **NSP-PCW-TF**	HC2-S3	Polycarbonate, white	Polyethylene Polyethylene, white Wire mesh Teflon	
NSP-PCG-PE **NSP-PCG-WM**	HF3x	Polycarbonate, grey	Polyethylene, grey Wire mesh	
NSP-ME-WM	HC2-IC probes	Filter carrier, nickel-plated brass, HC2 thread	Wire mesh DIN 1.4401	
NSP-ME-SS	HC2-IC probes	Filter carrier, nickel-plated brass, HC2 thread	Sintered steel DIN 1.4401	
NSP-ME-TF	HC2-IC probes	Filter carrier, nickel-plated brass, HC2 thread	Teflon	
SP-MC15	HC2-IM and HC2-IE probes	Filter carrier, nickel-plated brass, HC1 thread	Wire mesh DIN 1.4401	
SP-SC15	HC2-IM and HC2-IE probes	Filter carrier, nickel-plated brass, HC1 thread	Sintered steel DIN 1.4401	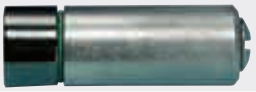
SP-TC15	HC2-IM and HC2-IE probes	Filter carrier, nickel-plated brass, HC1 thread	Teflon	
SP-T05	H2C-C05	Filter	Teflon	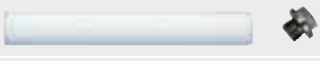
ET-Z10	HC2-HP28/50	Steel sinter filter, DIN 1.4401		

Technical data and order information for filter spare parts			
Order code	Probe	Material / Filter carrier	
NSP-ME	HC2-IC probes	Filter carrier, nickel-plated brass, for HC2-IC probes Order filter element separately	
SP-MSB15	HC2-IM and HC2-IE probes	Filter carrier, nickel-plated brass, for HC2-IM/IE probes Order filter element separately	
SP-M15	All industrial probes	Wire mesh filter For use with NSP-ME or SP-MSB15	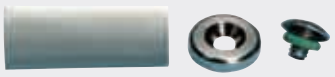
SP-S15	All industrial probes	Steel sinter filter For use with NSP-ME or SP-MSB15	
SP-T15	All industrial probes	Teflon filter For use with NSP-ME or SP-MSB15	

Passive connection cables			
Order code	Use / Info	Description	Range of application
E2-XX	For OEM applications, panel connection	Connector plug for HygroClip2 probes, 30 cm connection wires, open ends	Max. 100 °C
E2-F3A	To separate probes from devices with self-heating	0.3 m extension cable for HygroClip2 probes, plug/socket. Colour: anthracite	Max. 100 °C
E2-nnA	For nn = 01, 02, 05	Extension cable for HygroClip2 probes, plug/socket. Colour: anthracite, nn = length in m	Max. 100 °C
E3-F3A	To separate probes from devices with self-heating	0.3 m extension cable for HygroClip2 probes, plug/socket. Colour: white	Max. 100 °C
E3-nnA	For nn = 01, 02, 05	Extension cable for HygroClip2 probes, plug/socket. Colour: white, nn = length in m	Max. 100 °C
E2-nnXX	For OEM applications Max. supply voltage: 5.2 VDC For nn = 01, 02, 05	Connection cable for HygroClip2 probes, open ends, tin-plated. Colour: anthracite nn = length in m	Max. 100 °C
E3-nnXX	For OEM applications Max. supply voltage: 5.2 VDC For nn = 01, 02, 05	Connection cable for HygroClip2 probes, open ends, tin-plated. Colour: white nn = length in m	Max. 100 °C
Connection cables with voltage regulator			
E2-nnXX-ACT	Supply voltage 5...24 VDC / 5...16 VAC For nn = 01, 02, 05	Adapter cable for HygroClip2 probes, open ends, tin-plated. Colour: anthracite nn = length in m	Max. 70 °C
E3-nnXX-ACT	Supply voltage 5...24 VDC / 5...16 VAC For nn = 01, 02, 05	Adapter cable for HygroClip2 probes, open ends, tin-plated. Colour: white nn = length in m	Max. 70 °C

Technical data and order information			
Extension cable for Pt100 probes			Range of application
AC1607/nn	nn = length in m For nn = 01, 02, 03,05, 10, 15, 20	Extension cable for Pt100 probes	Max. -40...90 °C
Active connection and converter cables			
AC3001	Replaces MOK-xx-WIN Requires AC adaptor AC1207	Active converter cable for HygroClip2 probes for direct USB connection to a PC	Max. 70 °C
AC3002	Replaces MOK-xx-WIN	Active converter cable for HygroClip2 probes for direct RS232 connection to a PC	Max. 70 °C
AC3003	Signal amplifier set for HygroClip2 probes	Enables cable lengths between probe and transmitter of up to 100 m	Max. 70 °C
AC3005	Connects HygroClip2 probes to an Ethernet network. Requires AC adaptor AC1211	For direct connection of a HygroClip2 probe to a TCP/IP network (Ethernet)	Max. 70 °C
AC3006	Connects AirChip3000 devices to a PC / HW4	Service cable, converts the UART signalto USB	Max. 70 °C
AC3007	For direct RS232 connection Requires mains adapter AC1207 (9 VDC)	Active converter cable for AC3000 devices Mini USB service interface to RS232	Max. 70 °C
AC3009	Active converter cable for AC3000 devices	Mini USB service interface to USB	Max. 70 °C
AC3010	For direct connection of networkable AirChip3000 devices in operation without master	USB to RS485 converter Cable with open ends	Max. 70 °C

Standard cables		
AC0001	Standard Ethernet patch cable, 3 m, RJ45	
AC0002	Standard USB A/B cable, 1.8 m	
AC0003	Standard USB A to Mini USB cable, 1.8 m	
AC0004	Standard RS232 cable, 1.8 m, 9-pin, male/female	
AC0005	Crossover Ethernet patch cable, 3 m RJ45	
Mains adapters and card readers		
AC0100	For HygroLog NT flash cards	Universal card reader 
AC1207	For active adapter and converter cables	Mains adapter RNG 11, 9 V / 200 mA, 3.5 mm stereo jack, tip + 
AC1211	For HygroLog NT / docking stations	Mains adapter 240 VAC ‹› 12 VDC 
AC1212	For HP2x series	Mains adapter 240 VAC ‹› Mini USB 
AC1213	For power supply via RS485	Power supply unit 85-264 VAC / 15 VDC, 100 W, DIN rail mounting

Technical data and order information			
Mounting hardware			
AC5001	Adapter for 15 mm probes to 25 mm holes	25/15 mm probe adapter to HF4X and HF5X	
AC5002	For mounting of HF4x, HF5X, HF6X, transmitters on top hat rail	Mounting kit for DIN top hat rail (2 pc.)	
AC5003		Gasket for internal Ethernet interface	
AC5004	HF4, HF5, HF6, HP2X	Cover for service interface	
AC5005	For temperatures ‹100 °C	Mounting flange for 15 mm probes	
AC1301-M	For temperatures to 100 °C Perbunan gasket, M20 x 1.5 Brass, nickel-plated	Mounting gland for 15 mm probes	
AC1301-MEX	Ditto, for HygroClip EX probes	Mounting gland for 15 mm probes	
AC1302-M	For temperatures to 100 °C Perbunan gasket, M32 x 1.5 Brass, nickel-plated	Mounting gland for 25 mm probes	
AC1303-M	For temperatures to 200 °C Perbunan gasket, M20 x 1.5 Brass, nickel-plated	Mounting gland for 15 mm probes	
AC1304-M	For temperatures to 200 °C Perbunan gasket, M32 x 1.5 Brass, nickel-plated	Mounting gland for 25 mm probes	
AC1305	Ø 80 mm, steel, nickel-plated	Mounting flange for AC1301-M and AC1303-M	
AC1306	Ø 80 mm, steel, nickel-plated	Mounting flange for AC1302-M and AC1304-M	

TERMS AND CONDITIONS OF TRADING

1. General

1.1 These general conditions of sale and supply shall be binding when such have been stated as being applicable in an offer or confirmation of order of and by ROTRONIC Instruments (UK) Ltd

1.2 Orders shall only become binding upon ROTRONIC Instruments (UK) Ltd after it has issued a written confirmation of order.

1.3 These general conditions of sale and supply shall become valid as from January 1, 2000.

2. Prices

Prices shall be deemed net plus transportation and packaging charges (V.A.T. at prevailing rate applies), provided that alternative conditions have not already been agreed. ROTRONIC Instruments (UK) Ltd however hereby reserves the right to make price adjustments to cover definite increases in costs as for example the cost of wages, goods and materials.

3. Delivery period

The delivery period shall be the date laid down in the contract of sale and such may be extended should difficulties arise that may have been caused by act of God or force majeure such as war, epidemics and among other things storm and tempest.

4. Despatch

All deliveries shall be effected for the account and the risk of the customer. Any complaints concerning damage, loss or delay are to be reported to ROTRONIC Instruments (UK) Ltd within 7 days after the receipt of the consignment; but complaints concerning any faulty packaging shall be rendered on the same day as the receipt of the consignment.

5. Works deliveries

Should the consignment and invoicing be directly effected by the works supplier of ROTRONIC Instruments (UK) Ltd, the conditions of sale and supply of that particular works supplier shall be valid for customers in respect of that particular contract. In such cases, these present conditions of sale and supply shall have no validity and damage indemnity claims or claims of any other nature cannot be made enforceable against ROTRONIC Instruments (UK) Ltd hereunder.

6. Return of goods and materials

The return of goods and materials shall require the written permission of ROTRONIC Instruments (UK) Ltd and may only be effected if the goods and materials are in irreproachable condition and still in their original packaging, and only then if such are usually maintained in stock by ROTRONIC Instruments (UK) Ltd. A copy of the delivery note or the invoice must be enclosed. Returns without either a copy of the delivery note or the invoice will not be accepted. An appropriate surcharge will be levied by ROTRONIC Instruments (UK) Ltd on the purchaser to defray the cost of any inconvenience caused.

7. Settlement

Provided that alternative conditions have not already been agreed, invoices are to be settled net within 30 days without any deductions. Purchasers will be charged the usual bank overdraft rate of interest in respect of overdue payments.

8. Retention of ownership rights

All goods and materials supplied shall remain the property of ROTRONIC Instruments (UK) Ltd until full payment of the debited invoice amount shall have been received. The purchaser and the holder of the goods and materials shall in addition be under a duty hereunder to contract insurance cover for the goods and materials and, in their capacity as the insured, to assign any insurance claim of the purchaser to ROTRONIC Instruments (UK) Ltd

9. Warranty

ROTRONIC Instruments (UK) Ltd will grant a warranty for plant and equipment for a period of 24 months from the date of delivery in respect of any evidenced faulty workmanship and materials. Should a delivered consignment prove to be contrary to contract upon inspection, the customer shall grant ROTRONIC Instruments (UK) Ltd the opportunity hereunder of removing the fault, or else the customer may demand replacement. Should the supply or delivery of any improvement or replacement not prove possible, the customer may choose between having the purchase price reduced or in demanding the contract of, sale to be rescinded (conversion). Damage resulting from natural wear and tear, act of God, force majeure, non compliance with the operating instructions shall be excluded from the warranty as well as mechanical interference by the customer or by third parties with plant and equipment of ROTRONIC Instruments (UK) Ltd without its written permission.

10. Cancellation

Cancellation of orders shall only be possible hereunder with the written approval of ROTRONIC Instruments (UK) Ltd. Any costs which shall have already been incurred or price increases as a result of reductions in amounts ordered shall be for the account of the purchaser. Partial supplies of an order contracted upon call shall be claimed within the agreed supply and delivery periods, otherwise ROTRONIC Instruments (UK) Ltd may cause the relative consignment and invoice billing there fore to be made.

11. Place of jurisdiction

The place of jurisdiction hereunder shall be London, England. The purchaser expressly declares and agrees hereunder to waive the usual place of domicile as place of jurisdiction in favour of the foregoing jurisdiction agreed hereunder. Legal relationships hereunder shall be subject to UK law.

ROTRONIC WORLDWIDE

ROTRONIC is represented in more than 40 countries around the world. An up-to-date list of all our partners is available at
www.rotronic-humidity.com/international

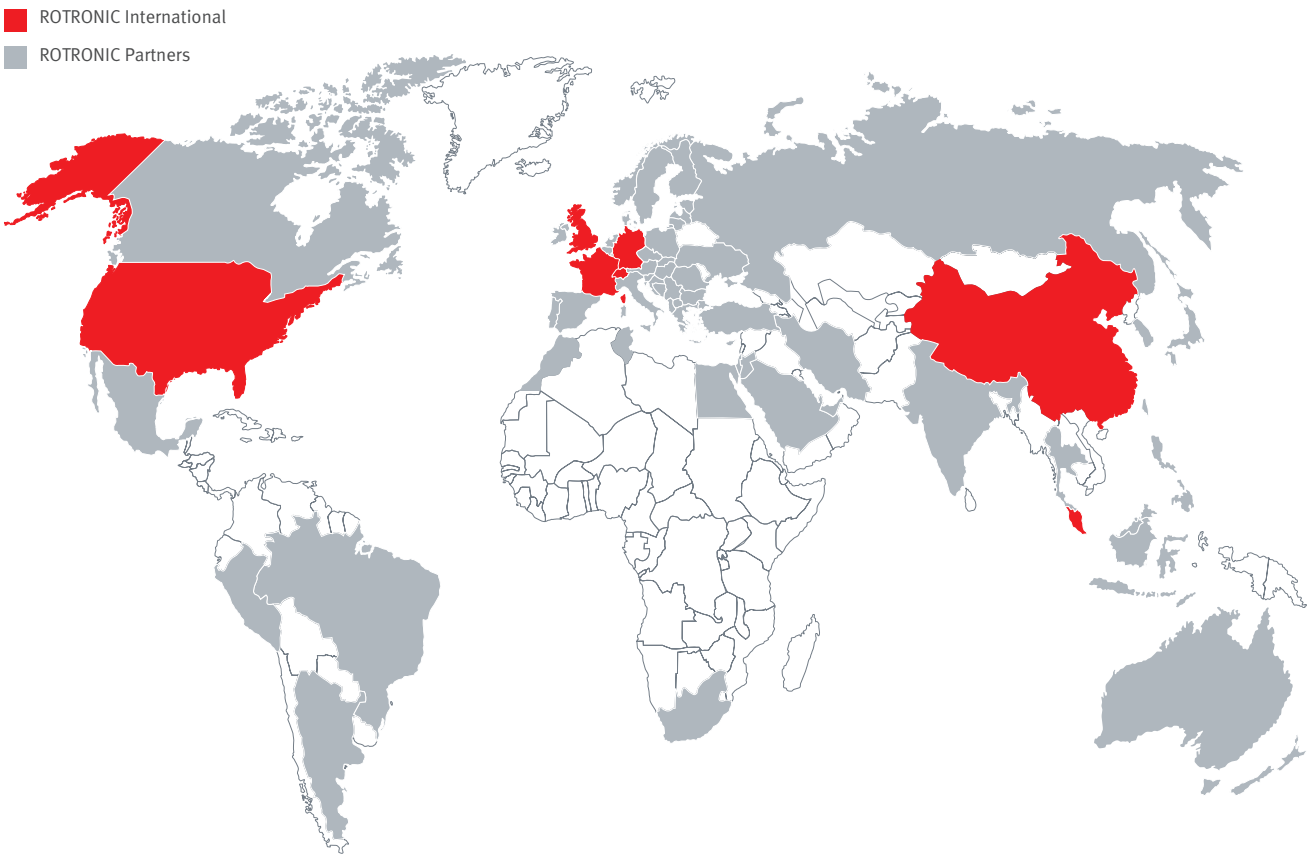

SWITZERLAND

ROTRONIC AG
Grindelstrasse 6, CH-8303 Bassersdorf
Phone +41 44 838 11 44
Fax +41 44 837 00 73
www.rotronic-humidity.com

GERMANY

ROTRONIC Messgeräte GmbH
Einsteinstrasse 17 – 23, D-76275 Ettlingen
Phone +49 7243 383 250
Fax +49 7243 383 260
www.rotronic.de

USA

ROTRONIC Instrument Corp.
160, East Main Street, Huntington N.Y. 11743
Phone +1 631 427 38 98
Fax +1 631 427 39 02
www.rotronic-usa.com

FRANCE

ROTRONIC Sarl
56, Bld. de Courcerin,
F-77183 Croissy-Beaubourg
Phone +33 1 60 95 07 10
Fax +33 1 60 17 12 56
www.rotronic.fr

CHINA

ROTRONIC Shanghai Rep. Office
2B, Zao Fong Universe Building, No. 1800 Zhong Shan West Road, Shanghai 200233, China
Phone +86 21 644 03 55
Fax +86 21 644 03 77
www.rotronic.cn

UK

ROTRONIC Instruments UK Ltd.
Crompton Fields, Crompton Way
Crawley, West Sussex RH10 9EE
Phone +44 1293 57 10 00
Fax +44 1293 57 10 08
www.rotronic.co.uk

SINGAPORE

ROTRONIC South East Asia Pte Ltd
16 Kallang Place #07-04
Singapore 339156
Phone +65 6294 6065
Fax +65 6294 6096
www.rotronic.com.sg

rotronic
LEADING IN HUMIDITY MEASUREMENT