Y-bearing short base plummer block units

SYFWK 25 LTHR

Housing material	Composite for food and b everage

Dimensions

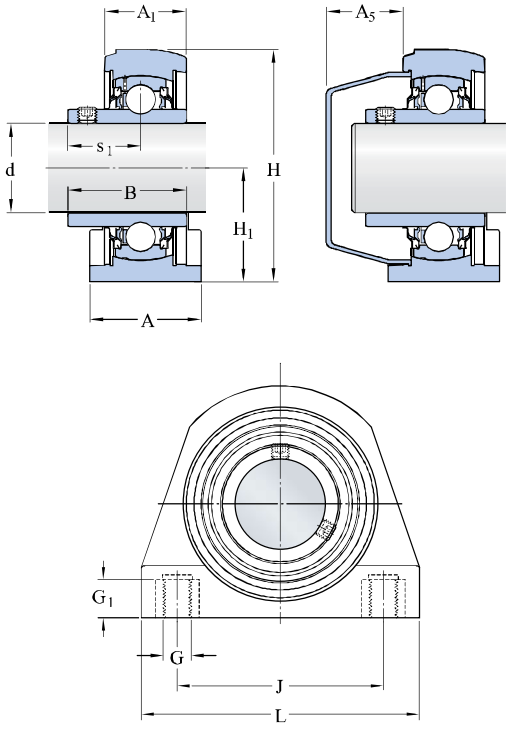

d	25	mm
A	40	mm
A_1	25.5	mm
A_5	22	mm
B	34.1	mm
H	73.5	mm
H_1	36.5	mm
J	50.8	mm
L	76	mm
s_1	19.8	mm

Calculation data

Basic dynamic load rating	C	11.9	kN
Basic static load rating	C_0	7.8	kN
Fatigue load limit	P_u	0.33	kN
Limiting speed		4300	r/min
(with shaft tolerance h6)			

Mass

Mass bearing unit		0.33	kg

Mounting information

Thread size attachement end	G	M10	
Thread length	G_1	12	mm
Hexagonal key size for grub screw	N	3	mm
Recommended tightening torque for grub screw		4	N·m

□□□ertaining □roducts

Housing	□□F□ □ 505 L
Bearing	□AR 205□2RFGR/H□

□□□ro□riate □roducts

□nd cover	□CL 205