Field-Attachable Connectors

BCC A345-0000-20-000-61X5A5-000
Order Code: BCC0FK5

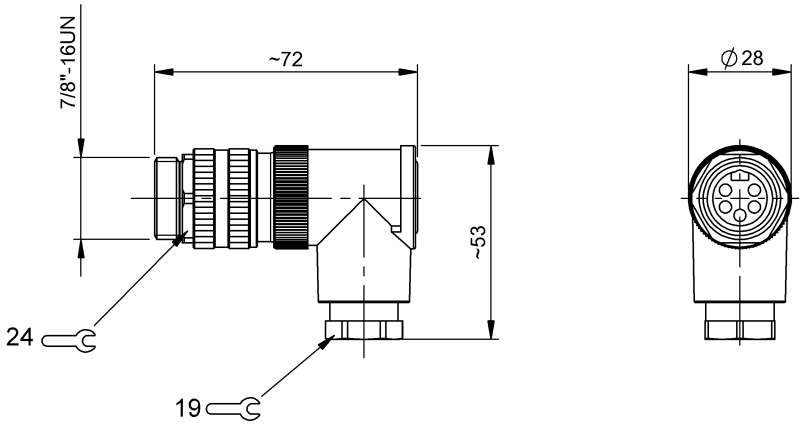

Basic features

Approval/Conformity	CE cURus EAC WEEE

Electrical connection

Cable diameter D	8...10 mm
Connection	7/8"-16 UN-Male, angled, 5-pin
Number of connectable contacts	5
System	Can be fabricated

Electrical data

Operating voltage Ub	600 VDC / 600 VAC
Rated current (40 °C)	12.0 A

Environmental conditions

Ambient temperature	-25...85 °C
IP rating	IP67

Material

Material contact carrier	PUR, PA/PA
Material contacts	Brass
Material cover nut	Die-cast zinc
Material grip	PBT

Mechanical data

Connection cross-section	0.75...1.5 mm²
Type of wire mounting	Screw terminals

Remarks

Enclosure rating per IEC 60529, only in screwed state with the associated mating piece.

Connector Drawings

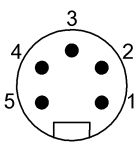

PIN 1-5 usable