YAR 207-2F

Popular item

Dimensions

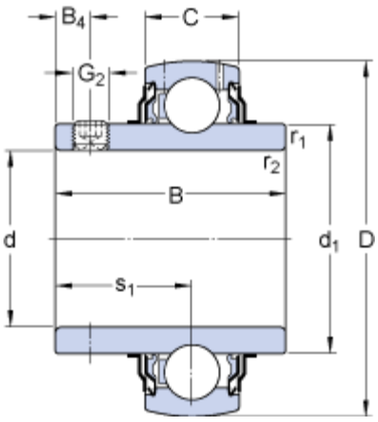

d		35	mm
D		72	mm
B		42.9	mm
C		19	mm
d_1		46.1	mm
B_4		6	mm
$r_{1,2}$	min.	1	mm
s_1		25.4	mm

Calculation data

Basic dynamic load rating	C	25.5	kN
Basic static load rating	C_0	15.3	kN
Fatigue load limit	P_u	0.655	kN
Limiting speed [1)]		5300	r/min
Calculation factor	f_0	14	

Mass

Mass complete bearing		0.45	kg

Mounting information

Thread grub screw	G_2	M6x0.75	
Hexagonal key size for grub screw	N	3	mm
Recommended tightening torque for grub screw		4	N·m

Assosiated products

Rubber seating ring	RIS 207 A